This is a digital copy of a book that was preserved for generations on library shelves before it was carefully scanned by Google as part of a project to make the world's books discoverable online.

It has survived long enough for the copyright to expire and the book to enter the public domain. A public domain book is one that was never subject to copyright or whose legal copyright term has expired. Whether a book is in the public domain may vary country to country. Public domain books are our gateways to the past, representing a wealth of history, culture and knowledge that's often difficult to discover.

Marks, notations and other marginalia present in the original volume will appear in this file - a reminder of this book's long journey from the publisher to a library and finally to you.

Usage guidelines

Google is proud to partner with libraries to digitize public domain materials and make them widely accessible. Public domain books belong to the public and we are merely their custodians. Nevertheless, this work is expensive, so in order to keep providing this resource, we have taken steps to prevent abuse by commercial parties, including placing technical restrictions on automated querying.

We also ask that you:

+ *Make non-commercial use of the files* We designed Google Book Search for use by individuals, and we request that you use these files for personal, non-commercial purposes.
+ *Refrain from automated querying* Do not send automated queries of any sort to Google's system: If you are conducting research on machine translation, optical character recognition or other areas where access to a large amount of text is helpful, please contact us. We encourage the use of public domain materials for these purposes and may be able to help.
+ *Maintain attribution* The Google "watermark" you see on each file is essential for informing people about this project and helping them find additional materials through Google Book Search. Please do not remove it.
+ *Keep it legal* Whatever your use, remember that you are responsible for ensuring that what you are doing is legal. Do not assume that just because we believe a book is in the public domain for users in the United States, that the work is also in the public domain for users in other countries. Whether a book is still in copyright varies from country to country, and we can't offer guidance on whether any specific use of any specific book is allowed. Please do not assume that a book's appearance in Google Book Search means it can be used in any manner anywhere in the world. Copyright infringement liability can be quite severe.

About Google Book Search

Google's mission is to organize the world's information and to make it universally accessible and useful. Google Book Search helps readers discover the world's books while helping authors and publishers reach new audiences. You can search through the full text of this book on the web at `http://books.google.com/`

COUNTWAY LIBRARY
HC 2ZGA 6

TRANSACTIONS

OF THE

OPHTHALMOLOGICAL SECTION

OF THE

AMERICAN MEDICAL ASSOCIATION,

AT THE 45TH MEETING, HELD AT

SAN FRANCISCO, CAL., JUNE 5–8, 1894.

CHICAGO:
AMERICAN MEDICAL ASSOCIATION PRESS.
1894.

9864

REPRINTED FROM THE
JOURNAL OF THE AMERICAN MEDICAL ASSOCIATION.

INDEX.

PAGE.

Are Low Degree Lenses Merely of "Mythical Value?" Starkey . . . 87

Asthenopia. Hobby 123

Chairman's Address. Baker 17

Cyclophoria; its Detection and Treatment. Price 129

Dioptric Media, the Visual Zone of the, and its Study by Skiascopy. Jackson 75

Eye-diseases, Sub-conjunctival Injections in the Treatment of. Briggs 171

Eye-ball, Conservative Treatment of Wounds of the. Taylor 189

Minutes of Meeting of Section on Ophthalmology, 1894. 11

Neurotomy, Optico-ciliary, with Exhibition of Scissors. Briggs . . . 177

Oculo-motor Phenomena, the Physiology of, with Respect to Some Recent Theories of Asthenopia. Eaton 25

Optic Atrophy, Relationship of, to Locomotor Ataxy. Jones 205

Ophthalmology, List of Members of the Section on 5

Purulent Ophthalmia and its Treatment. Scott 179

Pterygia, the Treatment of, with the Galvano-cautery. Hobbs 201

Retinoscopy as a Crucial Test in Measuring Errors of Refraction. Randall 63

Report on the Value of Objective Tests for the Determination of Ametropia, Ophthalmoscopy, Ophthalmometry, Skiascopy 53

Report on Examinations of the Eyes of 1,900 School Children of the Public Schools of San Francisco. Pischl 163

Rotary Prisms, a New and Convenient Arrangement of. Brown . . . 209

Skiascopy. Würdemann 69

School Children's Eyes—A Plea for the Examinatien of Every Child's Eyes when Commencing to Attend School. Southard . . 147

Toxic Amblyopia. Lydston 211

LIST OF MEMBERS OF THE SECTION ON OPHTHALMOLOGY.

Adams, A. L . . . . . Jacksonville, Ill.
Allen, H. P. . . . . Columbus, Ohio.
Allport, Frank . . . . . Minneapolis, Minn.
Arnold, J. Dennis . . . . . 580 Sutter St., San Francisco, Cal.
Aschman, G. A. . . . . 60 14th St., Wheeling, W. Va.
Ayres, S. C . . . . . 64 W. 7th St., Cincinnati, Ohio.
Bacon, Wm. T. . . . . Hartford, Conn.
Baker, A. R. . . . . 122 Euclid Ave., Cleveland, Ohio.
Baker, Chas. H. . . . . Marquette, Mich.
Baker, Fred . . . . . San Diego, Cal.
Barck, C. . . . . St. Louis, Mo.
Barkan, A. . . . . San Francisco, Cal.
Barnes, J. Steele . . . . . 805 Grand Ave., Milwaukee, Wis.
Bartlett, Edw. W. . . . . 422 Jefferson St., Milwaukee, Wis.
Beaver, Daniel D. B . . . . . Reading, Pa.
Bettman, B. . . . . Venetian Building, Chicago, Ill.
Bigelow, C. P. . . . . Big Rapids, Mich.
Blitz, Adolph . . . . . Indianapolis, Ind.
Bloodgood, Chas. . . . . Clinton, Ohio.
Blubach, C. B. . . . . Parkersburg, W. Va.
Bonner, H. . . . . Dayton, Ohio.
Briggs, Wm. Ellery . . . . . Sacramento, Cal.
Brown, N. H . . . . . 435 Pennsylvania Ave., Syracuse, N.Y.
Bryant, D. C . . . . . Omaha, Neb.
Buckner, J. H. . . . . 65 34th St., Cincinnati, Ohio.
Bulson, A. E . . . . . Jackson, Mich.
Burnett, Swan M. . . . . 1770 Massachusetts Ave., Washington.
Burrell, H. L. . . . . Omaha, Neb.
Burton, H. G . . . . . 1970 Third St., San Diego, Cal.
Campbell, Don M. . . . . Detroit, Mich.
Carrow, F . . . . . Ann Arbor, Mich.
Carvelle, H. D. W . . . . . Manchester, N. H.
Cheatham, Wm. . . . . 803 W. Chestnut St., Louisville, Ky.
Chilton, R. H. . . . . Dallas, Texas.
Chisholm, J. J . . . . . 114 W. Franklin St., Baltimore, Md.
Colburn, J. E. . . . . Venetian Building, Chicago, Ill.

Connor, Leartus . . . . . 103 Cass St., Detroit, Mich.
Conner, M. C. . . . . Middletown, N.Y.
Cook, Jas. M . . . . . Muskegon, Mich.
Coomes, M. T. . . . . Louisville, Ky.
Corr, A. C. . . . . Carlinville, Ill.
Cotter, Robt. O. . . . . Macon, Ga.
Cowgill, W. M . . . . . Paducah, Ky.
Curry, J. H. . . . . Toledo, Ohio.
Davis, S. B . . . . . McKee Building, Stockton, Cal.
Dean, G. Edgar . . . . . Scranton, Pa.
Denise, F. C. . . . . Omaha, Neb.
Dickinson, Frances . . . . . 70 State St., Chicago, Ill.
Dickinson, Wm. . . . . 1322 Olive St., St. Louis, Mo.
Dickson, John A . . . . . Ashtabula, Ohio.
Dowling, Francis . . . . . 164 W. 9th St., Cincinnati, Ohio.
Ducker, J. O . . . . . Louisiana, Mo.
Dunlavey, J. C . . . . . Sioux City, Iowa.
Eaton, F. B. . . . . Portland, Ore.
Eichelberger, W. C. . . . . Terre Haute, Ind.
Erwin, A. J. . . . . Mansfield, Ohio.
Fenton, Thos. H . . . . . 1335 Arch St., Philadelphia, Pa.
Fiske, Geo. F. . . . . Opera House Building, Chicago, Ill.
Fletcher, W. M. . . . . Susquehanna, Pa.
Fox, L. Webster . . . . . 1304 Walnut St., Philadelphia, Pa.
Friebis, Geo . . . . . 1720 Walnut St., Philadelphia, Pa.
Friedenwald, O. . . . . 310 N. Eutaw St., Baltimore, Md.
Fringer, W. R. . . . . Rockford, Ill.
Frothingham, Geo. E . . . . . 702 Woodward Ave., Detroit, Mich.
Fulton, J. F. . . . . 350 St. Peter St., St. Paul, Minn.
Gardiner, E. J . . . . . Venetian Building, Chicago, Ill.
Gibson, Robt. D . . . . . Youngstown, Ohio.
Gilman, R. W. . . . . Detroit, Mich.
Goodman, H. E. . . . . 1509 Walnut St., Philadelphia, Pa.
Gordon, W. A. . . . . San José, Cal.
Gould, Geo. M . . . . . 119 W. 17th St., Philadelphia, Pa.
Gradle, Henry . . . . . 65 Randolph St., Chicago, Ill.
Hall, Storrs . . . . . Rosendale, Wis.
Harper, J. E. . . . . Masonic Temple, Chicago, Ill.
Heath, F. C. . . . . 19 W. Ohio St., Indianapolis, Ind.
Hepburn, N. J . . . . . 399 W. 23d St., New York.
Herron, F. T . . . . . Jackson, Tenn.
Heustis, J. W. . . . . Pittsburg, Pa.
Hobby, C. M . . . . . Iowa City, Iowa.
Holmes, E. L. . . . . 112 Clark St., Chicago, Ill.
Holmes, C. M. . . . . 84 W. 7th St., Cincinnati, Ohio.
Hood, T. C . . . . . Dana, Ind.
Hotz, F. C. . . . . Venetian Building, Chicago, Ill.
Hubbell, A. A. . . . . 212 Franklin St., Buffalo, N.Y.
Hunt, David . . . . . 149 Boylston St., Boston, Mass.

Jackson, Edward . . . . . 215 S. 17th St., Philadelphia, Pa.
Johnson, W. B . . . . . Paterson, N.J.
Jones, H. I . . . . . 222 Post St., San Francisco, Cal.
Jones, Philip Mills . . . . . 67-70 Crocker Bldg, San Francisco,Cal.
Jones, S. J . . . . . 7 Jackson St., Chicago, Ill.
Kennedy, S. D . . . . . 158 Canal St., New Orleans, La.
Kelly, Walter J. . . . . Milwaukee, Wis.
Keyser, Peter D. . . . . 1832 Arch St., Philadelphia, Pa.
Kierulf, B. F . . . . . Los Angeles, Cal.
Kirkland, R. J . . . . . Grand Rapids, Mich.
Knapp, H. . . . . 26 W. 40th St., New York.
Koeller, Ferdinand . . . . . Pittsburg, Pa.
Kollock, Chas. W. . . . . Charleston, S. C.
Larimore, F. C. . . . . Mt. Vernon, Ohio.
Lautenbach, L. J. . . . . 600 N. 6th St., Philadelphia, Pa.
Le Mond, Robt. F. . . . . Denver, Colo.
Lippincott, J. A . . . . . Pittsburg, Pa.
Love, Louis F. . . . . Philadelphia, Pa.
Lowry, G. W . . . . . Hastings, Mich.
Lydston, Jas. A. . . . . Chicago, Ill.
Maire, L. E. . . . . 48 W. Adams St., Detroit, Mich.
Marmion, Wm. V. . . . . 1108 F. St., Washington, D.C.
McDermith, S. F. . . . . 1705 Champa St., Denver, Colo.
Miller, R. W. . . . . Los Angeles, Cal.
Milliken, B. L . . . . . Cleveland, Ohio.
Minney, J. E . . . . . Topeka, Kan.
Mittendorf, B. L . . . . . 104 Madison Ave., New York.
Montgomery, W. T. . . . . Venetian Building, Chicago, Ill.
Morrison, W. H. . . . . Philadelphia, Pa.
Morrow, E. P. . . . . Canton, Ohio.
Morton, Thos. G . . . . . 1421 Chestnut St., Philadelphia, Pa.
Moulton, H. . . . . Fort Smith, Ark.
Murrell, Thos. E. . . . . Commercial Bldg., 6th and Olive Sts., St. Louis, Mo.
Musser, F. R . . . . . Oakland, Cal.
Noyes, Henry E. . . . . 223 Madison Ave., New York.
Noyes, Jas. F. . . . . Detroit, Mich.
Noyes, J. F . . . . . Providence, R. I.
Oliver, Chas. A. . . . . 1507 Locust St., Philadelphia, Pa.
O'Neal, Oren . . . . . Wabash, Ind.
Park, J. Walter . . . . . Harrisburg, Pa.
Perkins, F. M. . . . . 1428 Pine St., Philadelphia, Pa.
Phillips, Ellis . . . . . New Haven, Pa.
Pischl, Kaspur . . . . . Crocker Bldg., San Francisco, Cal.
Pollock, S. . . . . St. Louis, Mo.
Portman, Adelaide M . . . . . White Oaks, New Mexico.
Price, G. H. . . . . 519½ Church St., Nashville, Tenn.
Prince, A. E . . . . . Springfield, Ill.
Ramsey, R. W . . . . . Chambersburg, Pa.

Randall, B. A. . . . . 1806 Chestnut St., Philadelphia, Pa.
Randolph, R. E. . . . . 211 W. Madison St., Baltimore, Md.
Ray, J. M . . . . . 419 W. Chestnut St., Louisville, Ky.
Reeve, R. A. . . . . Toronto, Can.
Reynolds, Dudley S . . . . . Louisville, Ky.
Reynolds, F. R. . . . . Eau Claire, Wis.
Richey, S. O . . . . . Washington, D.C.
Risley, S. D. . . . . 1722 Walnut St., Philadelphia. Pa.
Roberts, J. B . . . . . 1627 Walnut St., Philadelphia, Pa.
Roller, L. A. . . . . 122 Monroe St., Grand Rapids, Mich.
Roy, C. D . . . . . 56½ Whitehall St., Atlanta, Ga.
Ryan, L. B . . . . . Galesburg, Ill.
Sager, Jos. . . . . Celina, Ohio.
Sargent, Elizabeth . . . . . San Francisco, Cal.
Sattler, Robt . . . . . 64 W. 7th St., Cincinnati, Ohio.
Saunders, W. H. . . . . Mobile, Ala.
Savage, G. C . . . . . 619½ Church St., Nashville, Tenn.
Schneider, Jos . . . . . Milwaukee, Wis.
de Schweinitz, Geo. E. . . . . 1401 Locust St., Philadelphia, Pa.
Scott, X. C . . . . . 127 Euclid Ave., Cleveland, Ohio.
Sinclair, J. C . . . . . Nashville, Tenn.
Sinclair, A. G. . . . . Memphis, Tenn.
Simonton, A. C. . . . . San José, Cal.
Smart, W. A. . . . . Muskegon, Mich.
Smith, Eugene . . . . . 138 Lafayette Ave., Detroit, Mich.
Smith, F. T . . . . . Chattanooga, Tenn.
Smith, D. B. . . . . 10 Euclid Ave., Cleveland, Ohio.
Southard, W. F. . . . . 603 Sutter St., San Francisco, Cal.
Standish, Myles . . . . . 200 Dartmouth St., Boston, Mass.
Starkey, H. M. . . . . 70 State St., Chicago, Ill.
Steinboch, L. W . . . . . 716 Franklin St., Philadelphia, Pa.
Stevens, Geo. T. . . . . 33 W. 33d St., New York.
Strawbridge, G. . . . . 1500 Walnut St., Philadelphia, Pa.
Taylor, Lewis H . . . . . 41 S. Franklin St., Wilkes-Barre, Pa.
Taylor, P. Richard . . . . . Louisville, Ky.
Thompson, D. A . . . . . Indianapolis, Ind.
Thompson, J. L. . . . . 20 W. Ohio St., Indianapolis, Ind.
Thompson, J. H . . . . . Kansas City, Mo.
Thompson, R. L . . . . . Spokane Falls, Wash.
Thomas, Chas. H. . . . . 1807 Chestnut St., Philadelphia, Pa.
Thuner, Al . . . . . 114 Cass St., Detroit, Mich.
Tiffany, F. H . . . . . Kansas City, Mo.
Tilley, Robt. . . . . 125 State St., Chicago, Ill.
Tyner, T. J . . . . . Austin, Texas.
Tyres, Wm. C. . . . . Kansas City, Mo.
Turnbull, Chas. S . . . . . 1717 Chestnut St., Philadelphia, Pa.
Vermyne, J. J. . . . . New Bedford, Mass.
Voorhies, A. H . . . . . San Francisco, Cal.
Wakefield, W. H . . . . . Boston Block, Salem, N. C.

Walter, W. P . . . . . Marquette, Mich.
Ware, Lyman . . . . . 125 State St., Chicago, Ill.
Weeks, J. E. . . . . 154 Madison Ave., New York.
Weer, H. H . . . . . Bluffton, Ind.
Wescott, Cassius . . . . . 567 W. Madison St., Chicago, Ill.
White, J. A . . . . . Richmond, Va.
Wilber, Geo. D . . . . . Mineral Point, Wis.
Wilder, Wm. H. . . . . 70 State St , Chicago, Ill.
Wi'liams, Cornelius . . . . . St. Paul, Minn.
Wright, J. W . . . . . Columbus, Ohio.
Wood, Casey A. . . . . 103 Adams St., Chicago, Ill.
Wood, I. H . . . . . Nashville, Tenn.
Würdemann, H. V . . . . . 805 Grand Ave., Milwaukee, Wis.
Young, H. B. . . . . Burlington, Iowa.

SECTION ON OPHTHALMOLOGY.

MINUTES OF MEETING, 1894.

First Regular Session, Tuesday Afternoon, June 5.

The Section was called to order at 3 P.M.

Address by the Chairman, Dr. Albert R. Baker, of Cleveland, Ohio.

The first paper read was by Dr. F. B. Eaton, of Portland, Oregon, on "The Physiology of Certain Oculo-motor Phenomena, with respect to Some Recent Theories of Asthenopia."

Discussed by Drs. Edw. Jackson, Geo. H. Price, H. V. Würdemann, W. F. Southard, Kaspur Pischl, H. Bert Ellis and discussion closed by Dr. Eaton. Drs. Hobby and Lydston were absent and Dr. Voorhies unavoidably prevented from preparing his paper.

The general meeting of the Association having directed the Sections to appoint alternates in place of absent members of Executive Committees, the chair appointed Drs. Edw. Jackson, W. E. Briggs and H. V. Würdemann. The same committee to act as nominating committee for the Section. As Dr. Jackson could not serve owing to other duties, Dr. A. R. Baker was by vote appointed Chairman of the Committee. Adjourned.

Wednesday, June 6.—Morning Session.

Called to order at 9:30 A.M. Minutes of the previous meeting were read and approved.

The first order was the reading of the report of the committee appointed in 1893, to report upon "The Value of Objective Tests for the Determination of Ametropia—Ophthalmoscopy, Ophthalmometry and Skiascopy." Committee: Dr. Edw. Jackson, Chairman, Philadelphia, Pa.; S. M.

Burnett, Washington, D. C.; H. V. Würdemann, Milwaukee, Wis.; J. L. Thompson, Indianapolis, Ind.

As other papers were to be read, bearing upon the same subject, discussion was deferred until the same were read.

Dr. B. A. Randall being unavoidably absent and having sent his paper to the Secretary, the latter on vote of the Section was directed to read Dr. Randall's paper on "The Value of Retinoscopy as a Crucial Test in Measuring Errors of Refraction."

The next paper on "Status of Skiascopy" was read by Dr. H. V. Würdemann, of Milwaukee, Wis.

Dr. Jackson, of Philadelphia, then read a paper on "The Visual Zone of the Dioptric Media and its Study by Skiascopy."

The report and papers read were then discussed by Drs. F. B. Eaton, of Portland, Oregon; S. B. Davis, Stockton, Cal.; A. C. Simonton, San José, Cal.; R. D. Gibson, Youngstown, Ohio; Fred Baker, San Diego, Cal.; W. E. Briggs, Sacramento, Cal.; A. R. Baker, Cleveland, Ohio; L. R. Ryan, Galesburg, Ill.; H. V. Würdemann, Milwaukee, Wis.; Lewis H. Taylor, Wilkes-Barre, Pa.; A. J. Erwin, Mansfield, Ohio; and discussion closed by Dr. Jackson.

The Secretary read a communication from the Secretary of the Association, calling attention to the fact that all papers read before the Sections and to be referred for publication, with all plates, etc., are regarded as the exclusive property of the Association.

On motion the afternoon session was fixed at 3 P.M., instead of 2 P.M., in order to allow members to attend the general session of the Association.

Afternoon Session.

The report of the Nominating Committee not being ready, Dr. A. H. Voorhies, San Francisco, presented a patient on whom he had performed double cataract simple extraction; also instruments, cataract knife with double cutting edge and bulb apparatus for irrigating the anterior chamber.

The Nominating Committee reported as follows: President, Dr. Edward Jackson, of Philadelphia, and for Secretary Dr. H. V. Würdemann, of Milwaukee.

The Secretary was directed to cast the ballot in favor of the above named and they were declared unanimously elected.

Dr. S. D. Risley listed for the next paper being absent, Dr. H. M. Starkey, of Chicago, followed with a paper entitled, "Are Low Degree Lenses of Purely Mythical Value?"

Dr. C. M. Hobby's paper on "Asthenopia" was here presented and the Secretary by vote of the Section directed to read the same.

Discussion on the two papers followed, participated in by Drs. H. Isaac Jones, San Francisco; H. B. Ellis, Los Angeles; A. C. Simonton, San José; H. B. Young, Burlington, Iowa; Fred Baker, San Diego, Cal.; L. R. Ryan, Galesburg, Ill.; Geo. H. Price, Nashville, Tenn.; S. B. Davis, Stockton, Cal., and closed by Dr. Starkey.

The next paper, "Cyclophoria; Its Detection and Treatment," was read by Dr. Geo. H. Price, Nashville, Tenn.

Discussion by Drs. F. B. Eaton, Portland, Oregon; A. J. Erwin, Mansfield, Ohio; A. C. Simonton, San Diego; and closed by Dr. Price. The time for adjournment having arrived, the chairman announced that the next paper, "School Children's Eyes," would be deferred until the first order of business on Thursday morning. Adjourned.

Thursday, June 7.—Morning Session.

Called to order at 9:30 A.M. Dr. Baker, Chairman, being detained by a meeting of the Medical College Association, Dr. Edward Jackson, of Philadelphia, was appointed chairman *pro tem.* Minutes of June 6 were read and approved.

Dr. W. F. Southard, of San Francisco, then read a paper on "School Children's Eyes; A Plea for the Examination of Every Child's Eyes when Commencing to Attend School."

As Dr. Kaspur Pischl's paper was upon a similar subject, it was here called for, but as his charts had not arrived it was deferred.

Discussion upon Dr. Southard's paper followed, participated in by Drs. R. N. Miller, Los Angeles; L. R. Ryan, Galesburg, Ill.; F. B. Eaton, Portland, Oregon; H. M. Starkey, Chicago, Ill.; H. B. Young, Burlington, Iowa; Edward Jackson, Philadelphia, and closed by Dr. Southard.

Dr. W. E. Briggs, of Sacramento, Cal., then read two papers: 1. "Sub-conjunctival Injections in the Treatment of Eye Diseases." 2. Optico-Ciliary Neurotomy, with Exhibition of Scissors."

Discussion by Drs. Edward Jackson and Kaspur Pischl, and closed by Dr. Briggs.

The hour fixed for special order of business in the general session of the Association having arrived, the remaining papers were deferred and the Section adjourned to meet at 2 p.m.

Afternoon Session.

Section called to order at 2:40 p.m. Dr. Baker in the chair.

The first paper was read by Dr. X. C. Scott, of Cleveland, Ohio, on "Treatment of Purulent Ophthalmia."

Discussed by Drs. A. Barkan, San Francisco, Cal.; H. M. Starkey, Chicago, Ill.; Kaspur Pischl, San Francisco; H. V. Würdemann, Milwaukee, Wis.; J. Dennis Arnold, and discussion closed by Dr. Scott.

The next paper was read by Dr. Lewis H. Taylor, of Wilkes-Barre, Pa., on "Conservative Treatment of Wounds of the Eye-ball," and discussed by Drs. A. R. Baker, Cleveland, Ohio; W. E. Briggs, Sacramento, Cal.; X. C. Scott, Cleveland; H. H. Weer, Bluffton, Ind.; L. R. Ryan, Galesburg, Ill., and closed by Dr. Taylor.

Dr. Le Mond being absent, the next paper, "Some Unusual Reflexes from Pathologic Conditions," by Dr. Geo. H. Powers, San Francisco, was read by title and referred to Committee on Publication.

The same with paper by Dr. A. G. Hobbs, of Atlanta, Ga., on "The Treatment of Pterygia with the Galvano-Cautery," the paper having been sent to the Chairman, and Dr. Hobbs detained on account of illness in his family.

Dr. Kaspur Pischl read the next paper on "Report of the Examination of the Eyes of 1,900 Children of the Public Schools of San Francisco."

Discussed by Drs. S. B. Davis, H. H. Weer, H. B. Young, W. F. Southard, H. L. Burrell and closed by Dr. Pischl.

"Fractures of the Orbit," by Dr. J. F. Fulton, of St. Paul, was read by title and referred for publication, as the writer was engaged as Secretary of the Otological Section.

Dr. H. Isaac Jones, of San Francisco, then read a paper entitled, "Eye Symptoms in Locomotor Ataxia—With Presentation of a Patient."

Discussion by Dr. H. B. Young and closed by Dr. Jones.

A paper by Dr. Edward J. Brown, of Minneapolis, on "A New and Convenient Arrangement of Rotary Prisms," was read by title, as was also one by Dr. W. E. Hopkins, of San Francisco, on "Deposit of Cholesterin Within the Anterior Chamber from Non-Traumatic Causes."

Dr. W. T. Montgomery's paper on "Progressive Hypermetropic Astigmatism," was called for, but as the writer was not present this ended the reading of formal papers.

Miscellaneous business being in order, Dr. H. B. Young referred to legislation on prevention of blindness, and Dr. Southard asked the coöperation of all workers in ophthalmology in securing legislation in this direction.

Dr. H. M. Starkey presented the following, seconded by Dr. Southard, which was carried:

Resolved, "That it is the sense of the Section on Ophthalmology of the American Medical Association that the eyes of all children should be carefully tested by competent persons before entering upon school life."

Discussed by Dr. Ellis and Simonton.

The Executive Committee report as the topic for special discussion at next year's meeting, "The Examination and Care of the Eyes during School Life—Instruction of Teachers and School Authorities and Legal Provisions," and appointed the following Committee to prepare the report:

Drs. B. A. Randall, Philadelphia, Chairman; W. F. Southard, San Francisco, Cal.; H. B. Young, Burlington, Iowa; A. R. Baker, Cleveland, Ohio; George H. Price, Nashville, Tenn.

The Secretary read a communication from Dr. Savage, of Nashville, asking the Section to invite the International Ophthalmological Congress to hold its next session in this country, and suggested the appointment of a delegate or delegates to attend the meeting of the Congress to be held in Edinburgh in August next.

It was, however, the sense of the Section that as the Congress was not a representative body we could not properly send delegates to the same.

It was also deemed inadvisable for the Section to extend an invitation to the Congress to hold its next meeting in this country.

Dr. R. D. Gibson moved that the Section extend to its retiring officers a hearty vote of thanks for their labors in securing and carrying out the excellent program of the sessions. Carried by a rising vote.

The meeting for 1894 was then adjourned.

The Executive Committee of the Section on Ophthalmology for the ensuing year, according to the resolution adopted in 1891, will consist of Dr. J. L. Thompson, 20 West Ohio Street, Indianapolis, Ind.; Dr. S. D. Risley, 1722 Walnut Street, Philadelphia, Pa., and Dr. Albert R. Baker, 122 Euclid Avenue, Cleveland, Ohio.

A. R. Baker, Chairman.
Lewis H. Taylor, Secretary.

CHAIRMAN'S ADDRESS.

BY ALBERT R. BAKER, M.D.

PROFESSOR OF OPHTHALMOLOGY IN THE MEDICAL DEPARTMENT OF THE UNIVERSITY OF WOOSTER, CLEVELAND, OHIO.

One of the great faults of our medical societies is the occupation of the time in reading papers and participating in discussions which, for the most part, are the mere quoting of authorities and presenting of views that are not new.

The chairman is, however, a privileged individual in this respect, as he is either expected to present a *résumé* of the present status of our science, or make a few general platitudes that may serve to open the meeting of the Section, and if possible put us in good humor with ourselves and our profession. It would be fortunate if all of our old straw could be threshed out in this one address, so that the remainder of our time could be profitably spent in the presentation of original observations and participating in discussions that might prove of permanent value to each of us. And yet an occasional review of what has been done by our predecessors often proves of inestimable value, and nothing like an extensive acquaintance with the literature of the subject so effectually prevents the presentation of poorly prepared and incomplete observations as "new truths." I have had occasion to remark that it is much easier for me to prepare a paper on some other subject than those pertaining to the eye, and I suspect the reason is because I know less about what has been done in other directions. Because the thing is new to me I am tempted to present it as new to others.

A few years since when the treatment of granulated lids by "grattage" was proposed, I was reminded of

the treatment recommended by St. Yves[1] for a similar condition nearly two hundred years ago. He says: "It is to be noticed that the *Spots*, the *Ulcers*, and certain *Abscesses* of the Cornea Transparent, attended with an Inflammation of the Conjunctiva are more speedily cured by Bleeding of the *Eye*, than by any other Means. Notwithstanding in some cases it is not proper as Practice evinces. This Bleeding of the *Eye* is performed in different Manners. Some take a Bundle of Beards of *Oat-blades* and make a kind of Brush with which they scrape the Conjunctiva and so scarify it: [Grattage]. Others pass a covered lancet between the Globe and the Eye-lid and scarify the Cornea [Sclerotic] with it. Others glide a *Crooked Needle* under the varicous Vessells which communicate with the *Spot*, *Ulcer* or *Abscess* and cut the Vessels which creep on the *Conjunctiva*. This last operation is the surest and least painful." Have we anything better to propose to-day?

Since Richard Banister, Master of Surgery, Oculist and Practitioner of Physic, published his little book of twenty-three pages on the preservation of the "Eye-sight" three hundred years ago, in which our illustrious predecessor gave the *regime* he thought necessary to preserve the sight, together with the chief lotions, syrups and juices that should be applied to eye diseases, we have made wonderful progress; and yet we must confess there are many points needing elucidation, that will require the most patient study on the part of the anatomist, histologist, physiologist, pathologist and clinical observer.

Who will give us a clear and rational description of the course and termination of the intra-cerebral fibers of the optic nerve? Who will explain to us the cause of sympathetic ophthalmia? What are the relative functions of the rods and cones? Who will give us a good working theory of color perception? one that will explain color blindness. Why is it

[1] A New Treatise of Diseases of the Eyes by M. De St. Yves, translated from the original French by J. Stockton, M.D., London, 1741.

that after the canaliculus is slit and large probes passed that the tears continue to overflow? What operation for cataract extraction is the best? The last word has not been said on heterophoria and errors of refraction, as we shall doubtless learn before the close of this meeting. These and numerous other important problems require our most careful consideration. In order to solve these questions we can not be guided entirely by our own experience. Many of them can not be answered by one generation, and need not only the experience of ophthalmologists of the present, as well as the past, but that of the entire profession, including the labors of chemists, physiologists, physicists and men engaged in every department of scientific research. It will be a most unfortunate step backward if we, as ophthalmologists should permit ourselves to be segregated from the great body of the medical profession as the oculists have been in ages past, or as the dentists are now.

One of the most interesting chapters in Richard Banister's book[2] is devoted to the exposure of what he calls "proud quack-salving mountebanks, that would undertake all cures, and perform few." He says further: "In the methodicall practice and cure of blind people, by couching of cataracts, our English oculists haue always had an especiall care, according to arts, to couch them within doores, out of the open aire, to preuent further danger. Yet some of these mountebanks take their patients into open markets, and there,for vain-glories sake,make them see, hurting the patient, only to make the people wonder at their rare skill. Some others make scaffolds, on purpose to execute their skill vpon, as the Frenchmen and the Irishmen did in the Strand, making a trumpet to be blowne before they went about their work."

Much of the prejudice (and with justice) against oculists who treated diseases of the eye exclusively,

---

[2] A treatise of 113 Diseases of the Eyes and Eye-lids, by Richard Banister, Mr. in Chyrurgery, Oculist and Practitioner in Physicke, published for the second time in 1622.

has been handed down almost to our own day. Only a few years ago a most bitter fight was made against Dr. Nettleship's appointment on the staff of the Royal London (Moorfields) Ophthalmic Hospital. The only objection of any weight urged against his appointment was that he is not a general surgeon.

An interesting parallel between the separation of the oculists from the general profession of old, and the present tendency in that direction might be drawn. The tendency at present is to make expert opticians but poor oculists. We must be something more than spectacle pedlers. We must keep in touch with the general profession. In order to do this, we must not only have an extensive knowledge of general medicine and surgery, but we must insist upon better education of medical students in eye diseases.

Because the ophthalmologist fails to relieve a headache by the use of spectacles, or a tenotomy, he has not exhausted all the resources of his art. And even though he refer the case to the general practitioner he should be able to make intelligent suggestions as to the future management of the case. It is possible to have reflex troubles originating in the eye not due to refractive errors, muscular insufficiencies and possibly not manifested by gross pathologic changes in the eye itself. On the other hand it is possible to have pain referred to the eye as the result of some constitutional disease, or it may be of some local disease in a distant portion of the body.

The tendency to supply every town and village with one or more oculists so-called, who limit their practice to the treatment of eye diseases is not for the best interests of the patient or the profession. The helplessness of the average medical practitioner in a small town when some young gosling comes to the village with his six weeks' post-graduate instructions, brand-new trial case and ophthalmoscope is pitiful indeed. The practitioner is made to feel keenly his ignorance of the subject. He knows intuitively that he is being imposed upon by a few big sounding

names, but is entirely helpless in preventing this fledgling from giving myopic lenses to hypermetropes and snipping the ocular muscles of all the bright school girls in the village.

As an example of the ingenuity of these fellows I have in my possession a pair of bifocal lenses which analyzes as follows: Right eye + .25 C. axis 90 for distance, ⌒ + 25 C. ⌒ + .50 S. for reading. Left eye + .25 S. ⌒ + .50 C. axis 75 for distance, and + 1. S. ⌒ + .50 C. axis 75 for reading. These lenses were given to an Oberlin student aged 18, who has a simple hyperopic astigmatism of .75 D. axis 90 in each eye.

Every practitioner should possess an ophthalmoscope and a few trial lenses, and he should be able to fit spectacles much better than the jewelers and druggists who style themselves opticians, and I see no reason why he should make such ridiculous blunders as the above. That every practitioner who knows a little more about the care of eyes than his neighbor should pose as an ophthalmologist and limit his practice to eye diseases, is almost as preposterous as the claims of the jeweler optician. After an apprenticeship of ten, twenty or thirty years the ranks of the ophthalmologists should be recruited from these practitioners who have given the eye and its diseases special study.

There is a considerable amount of work which requires especial skill and experience on the part of the ophthalmologist in the diagnosis and treatment of eye diseases. It is not possible for a man to make a skilful cataract extraction who only has the opportunity to make the operation once or twice a year, nor is it possible to distinguish between a case of chronic glaucoma and atrophic cupping of the disk by one who sees such cases but once or twice in a lifetime. To make skilful operators and acute diagnosticians the specialist must have had a wide experience; and this can only be secured by a long apprenticeship, with exceptional opportunities for study and practical experience, in the performing of

delicate manipulations and the making of difficult operations.

The specialist is the general practitioner's most valuable assistant. He supplies him with skilled hands to do that he can not do. He furnishes him with educated eyes to see that he can not see. He gives him trained ears to hear that he can not hear. And he should supply him with a well stored mind to tell him that he does not know.

When about to select an architect to build a house, if we found him ignorant and exhibiting poor judgment in matters pertaining to religion, science, literature, art and other subjects about which we knew something, we should distrust his judgment in architecture about which we know nothing. If this is true in a general way, how much more must the physician distrust the judgment of the specialist who is ignorant of general medicine and surgery.

The promptness with which the announcement of the reading of a paper on an ophthalmic subject will empty the seats in our local and State medical societies is discreditable alike to the practitioner and to the oculist; discreditable to the physician because he does not take greater interest in ophthalmic subjects as no other special study lends so much assistance in the diagnosis, prognosis and treatment of disease remotely situated. Discreditable to the ophthalmologist because he does not make his papers so interesting as to compel attention. In order to do this he must as far as possible discard technical terms. The necessity for this is largely due to the insufficient and perfunctory manner in which ophthalmology is usually taught in our medical colleges.

A gynecologist has a great advantage in teaching his specialty, because of the simplicity of the structures, and the previous studies of the medical student in anatomy, physiology, embryology and obstetrics have prepared him for an intelligent understanding of the teaching of the gynecologist. But when the average medical student enters upon his ophthalmo-

logic studies it is a veritable *terra incognito;* he has little knowledge of the anatomy of the eye and its appendages and less of its physiology.

The nomenclature is all new, and because the subject seems difficult it is neglected. The lectures are cut, quizzes avoided, dispensaries not utilized and the practitioner is turned out with but little knowledge of the subject.

One of the principal reasons for this unsatisfactory conditions of affairs is that there is not enough time allotted to this subject in the medical curriculum. In some schools I am informed the study of ophthalmology is not compulsory. The teacher realizing the hopelessness of instilling any useful knowledge into the mind of the student in the few hours given him, is often content to call attention to the most frequent and grave ocular diseases, make a few operations and advise the student meeting such cases not to attempt their treatment but to send them to the nearest oculist.

It does not seem to me that we ought to be content to let this indifferent method of teaching this important subject continue. The use of the ophthalmoscope is not more difficult to learn than that of the stethoscope, and of much more value to the practitioner of medicine. The teachers of ophthalmic medicine and surgery ought to decide upon some definite minimum length of time in which the average senior medical student can master a good working knowledge of this subject, and then insist upon being granted this amount of time in the medical curriculum. This would require at least 100 hours; 50 of which should be devoted to didactic lectures, clinics and recitations, and 50 to practical work in the dispensary.

My experience as a teacher of ophthalmology has been that those students who leave college with some definite knowledge of eye diseases, not only treat more intelligently the cases coming under their care, but are the first to refer suitable cases to the special-

ist—so that the better education of the general practitioner in eye diseases does not curtail the number of cases referred to the oculist for treatment but increases the number of his consultations.

122 Euclid Avenue.

THE PHYSIOLOGY OF CERTAIN OCULO-MOTOR PHENOMENA WITH RESPECT TO SOME RECENT THEORIES OF ASTHENOPIA.

BY F. B. EATON, M.D.

PROFESSOR OF OPHTHALMOLOGY, OTOLOGY AND RHINOLOGY MEDICAL DEPARTMENT UNIVERSITY OF OREGON; OPHTHALMIC AND AURAL SURGEON GOOD SAMARITAN HOSPITAL. PORTLAND, OREGON.

That physiology is the basis of scientific medicine is generally recognized. Medical students are taught that physiologic processes and the known laws governing them, form the foundation of our knowledge of the pathologic conditions with which we have to deal,—a criterion of the value of clinical observation; the base-line from which we are to estimate every real or apparent deviation from the normal functions of the human body. More especially is this true as regards ophthalmology, in many respects the most scientific department of medicine. Nevertheless, there have appeared in our ophthalmic literature, during the past five years, a number of theories which, when critically analyzed have little or no substantial scientific foundation.

While it is true that our knowledge of ocular physiology is incomplete, yet those physicians whose educational training has disciplined their minds to act logically; to habitually analyze the evidence presented; to refer phenomena if possible to known laws, have naturally assumed a conservative attitude toward the attractive theories and sanguine assumptions of certain authors, and it is in the ophthalmological sections of our societies and congresses that a minority of the members, possessing the cour-

age of their convictions, have opposed them. The articles of these authors indicate that though they conduct their examinations with a degree of method as regards the use of ordinary tests and apparatus, they do not employ an equal degree of scientific method in marshalling their facts or make correct inferences from the knowledge so acquired—in fact, they do not reason scientifically. To do so as regards the phenomena of binocular vision requires, as we know, a considerable knowledge of physics and mathematics, as well as the ability to apply it; above all it requires an intimate knowledge of ocular physiology. Instead of referring their observed facts to some known natural law, or seeking an unknown law on which to ground them, some of our authors hasten to propound an hypothesis to which an inadequate number of observed facts are made to conform, thus pursuing a *deductive* rather than an *inductive* method of reasoning.

Nevertheless, while without theoretical proof and practically more or less mischievous, some of these novel and attractive hypotheses and the therapeutics based upon them have attained, to judge from some current ophthalmic literature a wide popularity, and govern the practical work of many of our colleagues. They who have the best interests of American ophthalmology at heart should not therefore take refuge in indifferent silence.

There is, as we know, a considerable difference of opinion among ophthalmologists of to-day concerning the significance of the phenomena attendant upon the function of binocular vision, which comprehends the two associated functions of the focal and axial adjustment of the eye. Especially is there a difference of opinion as to the relative influence to be attributed to each of these functions as a cause of asthenopia.

During the past five years particular attention has been directed to the oculo-motor apparatus, largely owing to the refinement of the clinical apparatus employed for the detection of errors of muscular

equilibrium, and to their classification under the various forms of heterophoria.

In the discussion of papers bearing on this subject, it appears to me that those participating have too little common ground on which to meet. As an illustration of this, I may mention the remark of Dr. Stevens in a recent paper, that the half written cases with bare statements of the results of certain tests "leave in the mind of the critical reader the impression that the writer has not himself ascertained the remaining facts necessary to a just conclusion." How rarely, for instance, do we find in the report of an asthenopic case any record of the ranges of accommodation and convergence, or more important still, a record of the relative ranges of these two functions, physiologically so closely connected with normal adjustment of the eyes.

While it is not my purpose to attempt an elaborate discussion of theories, I shall endeavor to analyze certain hypotheses concerning the origin of asthenopia, so as to demonstrate wherein they are or are not tenable as correct or incorrect doctrines, according to the established principles of physiology and the facts of clinical experience.

Let us consider first the theory of "insufficiency of the oblique muscles," the discovery of which its author states he announced in 1891 as an explanation of certain cases of eye-strain. Briefly stated, the phenomenon[1] is as follows: A horizontal line being regarded at eighteen inches and seen double by one eye before which a Maddox prism is held, a third line is seen between the two parallel ones and according to the author, "with which it should be perfectly parallel." In "insufficiency," the right end of the middle line pointing toward the bottom and the left end toward the top line, or *vice versa* depending on the nature of the individual case. As is well known, upon this phenomenon, dignified by the term cyclophoria, the theory has been erected which is held to be explanatory of a form of asthenopia, and this is supposed to be corroborated by the relief claimed to result from

the gymnastic exercise of the oblique muscles by cylindrical lenses. That this phenomenon is a physiologic one and that the eyes normally rotate outward on the axis of fixation in convergence, any one can easily verify by a few simple experiments, with or without prisms. One of the simplest is a modification by Le Conte of Meissner's original experiment for the determination of the horopter: "Hold a stretched black thread parallel with the surface of the glass of an open window, and within half an inch of it. Now, with the eyes in the primary position look, not at the thread, but at some spot on the glass. It will be seen that the double images of the thread are not parallel, but make a small angle with each other, thus—V."[2] I have found a simpler experiment can be made by taking a piece of black thread about eight inches long, tying a knot midway between

Fig. 1.

the ends, moistening it and then sticking it in a horizontal position on a pane of glass at the level of the eyes. Then converging the eyes upon the knot and approaching it gradually, at a distance of from four to six inches the thread will appear double toward the ends, the knot and the thread for about one-quarter of an inch on each side of it appearing single and the divergence of the ends increasing with the convergence. The divergence is increased by inclining the head so as to converge upwards, since in the great majority of cases the inclination of the images is that resulting from an outward rotation of the eyes on the line of fixation; this rotation is decreased by looking downward, and as Le Conte and Meissner have shown, the vertical meridians of the eyes are parallel and vertical when the plane of vision is depressed 45 degrees, so that the inclination of the middle line as seen by a Maddox double prism disap-

pears at that inclination. In some cases the rotation is in the contrary direction and all the conditions reversed.

That this phenomenon in no way disturbs binocular vision, is owing to the habitual neglect or toleration of the necessarily incoincident positions of images outside the immediate area of fixation. Meissner, who arrived at his results indirectly while investigating the question of the horopter, attributed the phenomenon to an outward rotation of the eyes on the visual axis. By far the most refined method of proving and measuring this rotation in convergence is that described by Prof. Le Conte (*loq. cit.*, p. 180): "Prepare a plane two feet long and one foot wide. Dividing this by a middle line into two equal squares, let one of the halves be painted black and the other white. Let the whole be covered with rectangular coördinates, vertical and horizontal; on the black half the lines being white and on the white half black. Near the middle of the two square halves, and at the crossing of a vertical and horizontal line, make two small circles, c c′. Set up this plane on the table in a perfectly vertical position, and at a distance of two or three feet. Rest the chin on the table immediately in front of the plane, with a book or other support under the chin, so that the root of the nose shall be exactly the same height as the circles, which in this case is about six inches. Now shutting alternately one eye and the other, bring the image of the lowest part of the root of the nose coincident with the horizontal line running through the circles. The primary plane is now perfectly horizontal, and therefore at right angles to the experimental plane. Now, finally, converge the eyes until the right eye looks directly at the left circle, and the left eye at the right circle, and of course the two circles combine. If one is practiced in such experiments and observes closely, he will see that the vertical lines of the two squares (which can be readily distinguished, because those of one are white and of the

other black), as they approach and pass over one another successively, are not perfectly parallel, but make a small angle, thus—$^{r}V^{l}$; and also that the angle increases as the convergence is pushed farther and farther, so that lines even beyond the circles are brought successively together. Similarly also the horizontals cut each other at a small angle, but this is not so easy to observe as in the case of the verticals.

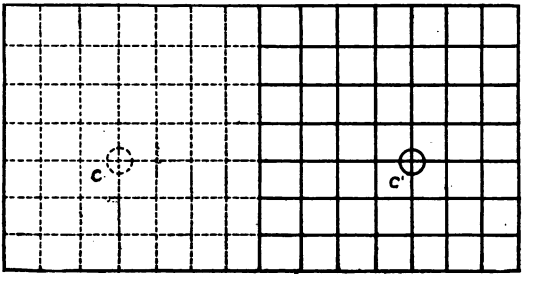

Fig. 2.—In this drawing the left half is drawn with red lines on a white background, because of the difficulty of drawing white on black background, as it should be.

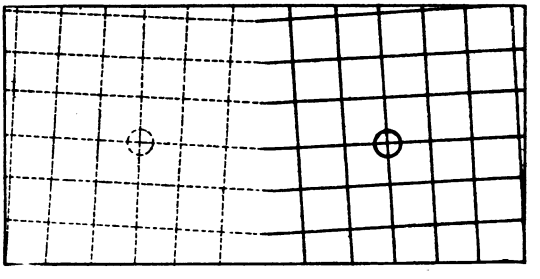

Fig. 3.—Left half should be white lines on black background.

"*Experiment 3.*—A far more accurate mode of measuring the amount of rotation is by constructing diagrams on a plane similar to the one used in Experiment 1, but in which the verticals and horizontals are both inclined on the true verticals and true horizontals in a direction contrary to the rotation of

the eyes, *i. e.*, inward—and then determining the degree of convergence necessary to make them come together perfectly parallel. I find that for my eyes, when the verticals are thus inclined in each square one and one fourth degrees with the true vertical, and therefore make an angle of two and one-half degrees with each other, they come together parallel when the point of sight is seven inches from the root of the nose. When the angle of inclination in each is two and one-half degrees with the true vertical, and therefore 5 degrees with each other, the point of sight must be four inches off. When the inclination with the true vertical is 5 degrees, and therefore 10 degrees with each other, the point of sight is two and one-fifth inches. Finally, when the inclination with the true vertical is 10 degrees, or 20 degrees with each other, then they can be brought together parallel only by the extremest convergence, the point of sight being then only a quarter of an inch in front of the root of the nose. In the diagram, Fig. 3, the lines, both vertical and horizontal, are inclined inward one and one-fourth degrees, and therefore the verticals of the two squares make an angle with each other of two and one-half degrees. It is therefore a reduced *fac simile* of the plane used. The coördinate lines coincide when the point of sight is seven inches from the root of the nose."

The evidence of Hering regarding the physiologic rotation in question is also unmistakable: "In general," he says,[3] "the vertical meridians of the globe undergo, in symmetrical positions of convergence of the visual lines, a rotation in the course of the inferior oblique, so that their upper ends diverge more when the visual plane is elevated and converge less when it is lowered than is the case with parallel visual lines and similar positions of the visual plane."

Finally, Landois[4] states under the head of "tertiary position," which he defines as "the position brought about by the movements of the eye, in which the lines of vision are convergent, and are at the

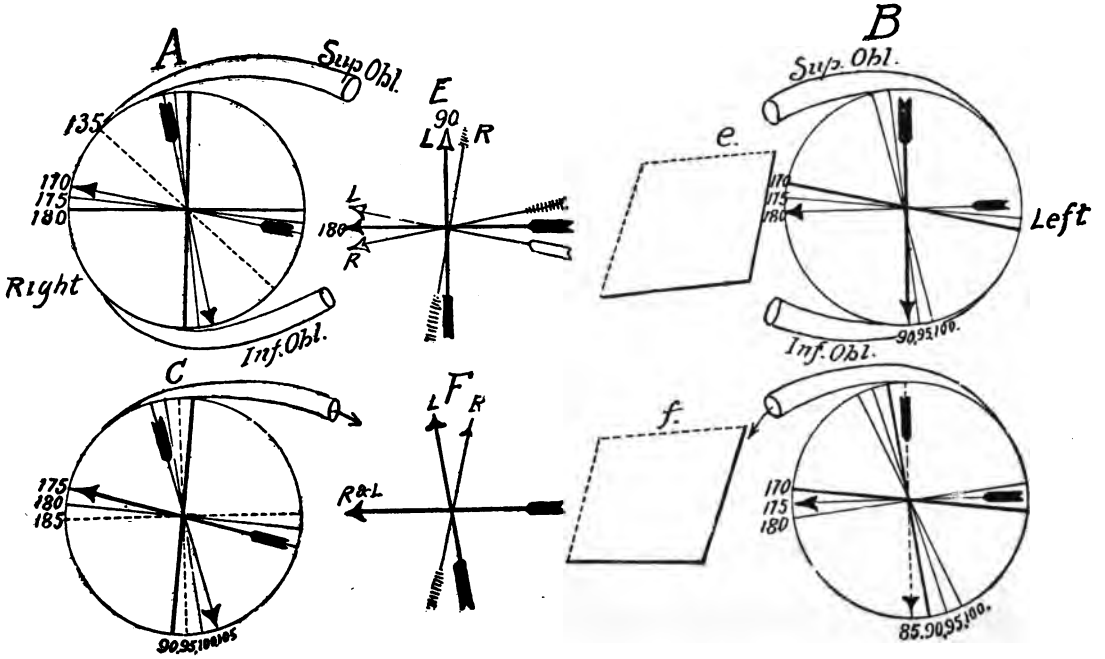
A
Sup. Obl.
135
170
175
180
Right
Inf. Obl.
E
90
L
R
L
180
R
B
Sup. Obl.
e.
170
175
180
Left
90,95,100.
Inf. Obl.
C
175
180
185
90,95,100,105
F
L
R
R&L
f.
170
175
180
85,90,95,100.

Fig. 4.

same time inclined upwards or downwards; . . . the eye-ball is always rotated at the same time round to the line of vision and round its axis."

It will be noticed that Le Conte alone demonstrates a convergence rotation in the horizontal position of the primary visual plane.

Thus by the independent investigations of three careful and scientific observers, the outward rotation of the eyes in convergence has been for twenty years established as purely physiologic, yet as evoked by prisms it has not only been employed by Dr. Savage as the proof of a pathologic condition, but upon it he has actually based a therapeutic method, the value of which he has failed to substantiate by any adequate clinical evidence. I have satisfied myself by careful and repeated experiments, that this outward rotation begins in some perfectly healthy eyes, free from all asthenopia, at a distance of twenty inches, when slight vertical diplopia is produced by a prism, and that an elevation of the visual plane of 20 degrees will render it appreciable when the line observed is twenty-two inches distant. The action of the oblique muscles is invoked in support of still another theory of this author, namely, that of

"*The Harmonious Symmetrical Action of the Oblique Muscles in all Cases of Oblique Astigmatism.*" Briefly stated, this theory is based upon the assumption that the cylindrical deflection of the retinal image produced by corneal astigmatism necessarily produces a disturbing diplopia, unless this is neutralized by a compensatory rotation by the oblique muscles.

In an article published on "Binocular Metamorphosia," five years ago,[5] Dr. J. A. Lippincott, of Pittsburg, gave a clear analysis illustrative of the action of cylindrical lens with axes oblique in deflecting the retinal image, which applies to corneal astigmatism, in all cases of which the corneal surface is represented by a convex cylinder with its axis at the meridian of lowest refraction. Since each half of such a lens may be regarded as a prism with its base

at the axis, the deflection of incident rays and the position of the resultant retinal image may be readily determined, as Dr. Lippincott has shown. Moreover the amount of deflection rapidly decreases in proportion as the lens is approached to the eye. Thus I have found that a —2.00 cylinder held before one eye at a distance of thirteen inches, deflects the horizontal line of an astigmatic test chart 6 degrees by measurement, while held close to the eye the deflection is but three-fourths of a degree. The deflection produced by the same amount of cyclindrical effect at the corneal surface must be still less.

The drawings in Dr. Savage's article, (*Ophthalmic Record*, Vol. i, p. 1) illustrating the compensatory action of the oblique muscles, give with his description a plausible weight to his theory, but when closely analyzed it will be found that the supposed rotation, which would bring the retinal images of a *horizontal* arrow upon corresponding portions of the retina, will at the same time not only fail to accomplish the same as regards a *vertical* arrow, *but the images of the latter will be made to harmonize still less than before the rotation.* In other words if a square card or astigmatic fan be viewed through a convex cylinder of 3 D. held about six inches from the right eye with its axis at 45 degrees, the other eye being closed, the right side or vertical line will be inclined 9 degrees to the right, and the lower side or horizontal line 9 degrees down to the left. (See Fig. 4, E and e). Now if the card or fan be rotated outward (which has the same effect as an inward rotation of the eye and lens) the horizontal line (side) will rotate to the right more rapidly than the vertical and will be horizontal; that is, its retinal image will be fused with the image of the same line as viewed by the left eye (Fig. 4, C and D). But the same rotation inclines the vertical line (side) still more from the true vertical, and its retinal image will be less parallel than before to that of the left eye. (Fig. 4, C and D). If each eye views a separate fan and each

fan be rotated outward 5 degrees, the horizontal retinal images will coincide, while the vertical ones will be separated more at their tops by 10 degrees than before the rotation (see Fig. 4, F and f). Hence each rotation would defeat the very object for which it is invoked. But even if optical laws would permit of the correction claimed, it would not be necessary, for, as I have shown above, the maximum obliquity of the axis of the corneal cylindrical surface (45 degrees) produces a very slight deflection, *and incoincident images lying outside the immediate area of fixation are habitually neglected.* Indeed, upon the latter fact is dependent stereoscopic vision, since our conception of solidity results from the relief given to that portion of an object or scene binocularly fused in one plane, all other objects in front or behind that plane falling on non-corresponding points of the retina and producing double images which are neglected. This is very lucidly illustrated by Prof. Le Conte.[6]

As he states: "If we view in a stereoscope the fused image of the projection of a skeleton truncated cone as seen from two positions (Fig. 5, A and B) and are able to analyze our visual impressions, when the summit is fixed (Fig. 5, C) the base or larger circle is double, and *vice versa*, (Fig. 5, D) and still further that the lines a a′ and b b′ form a V or an inverted V or an X, according to the distance of the point of sight, which, by more or less convergence, is run back and forth, uniting different parts, and thus we acquire a distinct perception of depth of space."

In an article published two years ago by Dr. Harry Friedenwald on "Binocular Metamorphosia,"[7] he demonstrated that if two parallelograms similar in shape to those seen by a pair of eyes with a+2D cylinder, axes symmetrically oblique (45 degrees temp.) when regarding a square card are placed in a stereoscope, "they are fused so as to give the impression of a trapezoid, narrow at the top, and which is apparently leaning forward so that the top seems to be much nearer than the base. . . The appearance of

depth points conclusively to the fusion of dissimilar images." That is, to such a fusion as illustrated by Prof. Le Conte's truncated skeleton cone. Dr. Friedenwald remarks that the above cited theories of Dr. Savage are "false in theory and dangerous in practice," and Dr. Lippincott states[8] that for the production of binocular metamorphosia "the existence of an astigmatic defect is not a *sine qua non*, although the phenomena are especially noticeable in cases of astigmatism of one or both eyes, in which the chief meridians are oblique." In such cases, he states further, "there ought to be an apparent inclination of one or both sides, as the case may be, of a square (so) that objects, therefore, and their retinal images do not correspond in form. Experience, however, derived especially through the sense of touch enables the mind to correct the erroneous information furnished by the sense of sight. *In other words, inaccurate retinal images are translated into more or less accurate mental impressions.*"—(Italics my own.)

As regards these theories then I conclude:

1. The phenomena included under the term, "cyclophoria," are physiological, being the result of the normal rotation of the eyes in convergence.

2. The phenomena in no way disturb binocular vision, owing to the habitual neglect or toleration of the incoincident positions of images outside the immediate area of fixation.

3. A compensatory rotation of the eyes in cases of oblique astigmatism does not take place; if it did, it would defeat the very object for which it is invoked by the author of the theory.

4. If optical laws would permit of the alleged correction, it would not be necessary or expedient, since it would render stereoscopic vision impossible.

Another theory to which I desire to call attention, is that termed by its author, Dr. Geo. M. Gould, "Innervational Abnormalism the Cause of Heterophoria,"[9] and which he has more particularly elaborated in regard to the etiology and treatment of exo-

phoria, stating: "I now wish to go so far as to state that my experience shows that every case of exophoria (and possibly of divergent strabismus) is certainly and quickly curable by a rational and common method of ocular gymnastics—*of a certain kind, however, mark well,* and absolutely without operation." He states further:[10] "It appears to me beyond ques-

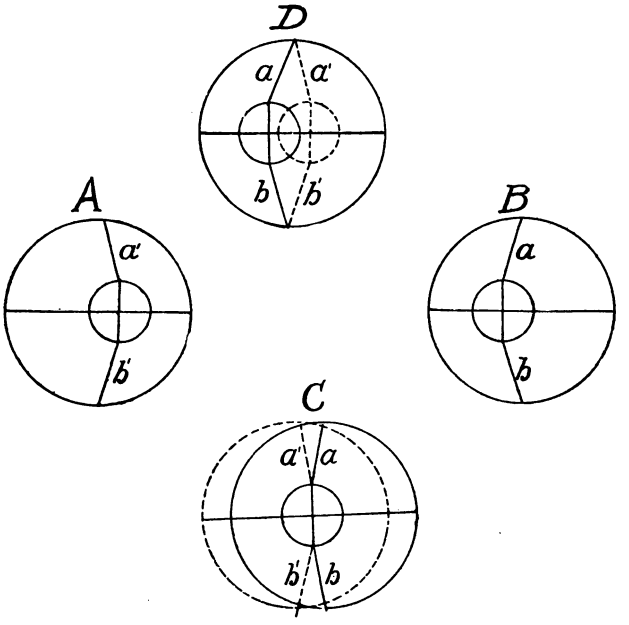

Fig 5.

tion that in the vast majority of cases of exophoria, if not in all, the seat of the abnormality is purely, at least primarily, and always principally, central and innervational. It is not at all a question of tendon insertions or of muscular strength." If therefore the seat of the difficulty lies in the innervational

centers and coördinates, the treatment by tenotomy, or by gymnastic exercises (with weak prisms) seems to fall to the ground. We must instead seek to normalize innervation leaving the muscles and tendons entirely out of the count. In accordance with this, I have sought to break up the bad habit of exophorial innervation and reëstablish normality in an erroneous nervous coördination, to heighten convergence stimulus, and to carry this increased stimulus, as well as the naturally heightened stimulus of convergence at near range, into distant and all-around seeing." The method he suggests is that of "weighting," or handicapping convergence by adducting prisms at the near point, "then slowly carrying the object gazed at fixedly and continuously from the near to the distant point. This is repeated until the eyes with 20 degree prisms (total) can hold objects all about the room easily. "This repetition is to continue several times daily until this adduction power *is habitual*, and until no diplopia is produced on first adjusting the prism fronts and looking at distant objects immediately. When this condition has been reached, the strength of the handicap prisms is to be increased say, to 25 or 30 degrees and the method resumed as before. Before an adduction of 30 degrees (total) has been reached, the symptoms of asthenopia will long have vanished, but the manifest or latent exophoria will still usually, and to some degree, be present. The treatment from 30 to 40 degree prisms should be continued until all manifest and latent exophoria has disappeared, and 2 degrees of esophoria has become manifest."

"Deficient adducting power," he emphasizes, "is the source of trouble and the thing to cure."[11]

These views may be considered from two standpoints, viz:

1. In regard to the teachings of physiology.

2. In regard to the practical experiences of the ophthalmic surgeon.

1. The contention of Dr. Gould that the doubling

or trebling by his method of the prism-adductive power at twenty feet, has nothing to do with "muscular strength or tendon insertions," is not in accordance with physiologic facts for:

a. The ocular muscles being striated muscular tissue are therefore subject to the laws of nutrition, metabolism, and the transformation of chemical into kinetic energy, in virtue of which, when made to vigorously contract, unlike other machines they are increased in strength and rendered capable of accomplishing more work.—(Du Bois-Reymond)

b. The mutual relations existing between the motor nerve-cells and the muscles, are not, however, inflexibles. Physiologists tell us that "stimuli act as liberating or discharging forces."[12] "These discharging forces may themselves be very feeble, but they are capable of causing the transformation of a large amount of energy."[13]

Foster remarks that it "might be imagined that a muscle which, when loaded with a given weight and stimulated by a current of a given intensity, had contracted to a certain extent, would only contract to half that extent when loaded with twice the weight and stimulated with the same stimulus. Such, however, is not necessarily the case; the height to which the weight is raised may be in the second instance as great or even greater than the first. That is to say, the resistance offered to the contraction actually augments the contraction; the tension of the muscular fiber increases the facility with which the explosive changes resulting in a contraction take place. And we have other evidence that anything which tends to stretch the muscular fibers; that any tension of the muscular fibers, whether during rest or during contraction, increase the metabolism of the muscle."[14] That this property of healthy muscle tissue must modify the conditions and results of its innervation and coördinations, can not be doubted.

c. A strong muscle (well nourished and exercised) responds more powerfully to a given stimulus (*i. e.*,

sets free more energy) than a fatigued or unexercised one, and it requires a relatively feebler stimulus to accomplish a given amount of work with the former than with the latter.

d. "Of two muscles having the same cross section, the larger can do more work; whereas if two muscles are of equal length, that which contains the greatest number of parallel fibers will do more work than the other."[15]

e. Congenital variations, such as assymetry of the cranium, orbit and face (Stevens, Landolt[16]); exaggerated distance between the centers of rotation of the eyes (Mannhardt, DeRosset[16]); exaggerated divergence of the orbits (Emmert,[16] predispose the eyes to divergent strabismus, and much more to exophoria. "Abnormal conformation of the orbits," says Landolt, "giving rise to anomalies of origin or direction of the ocular muscles, may also cause a discordance in the direction of the eyes. Likewise defects of bulbar insertion and of the length and elasticity of these muscles upon which the most authoritative writers have strongly insisted. (Schweigger, von Hasner, Graefe and others.)"[16]

2. Let us now consider the innervational theory of the origin of heterophoria, and especially of simple exophoria *in the light of practical clinical ophthalmology.*

a. The auther maintains that "deficient adducting power is the source of trouble and the thing to cure," in exophoria, and which he considers wholly central and innervational.

b. I note first that the author's device of carrying the "weighted-convergence-stimulus" from the near to the far point is of value in rapidly developing the positive portion of the patient's *relative* range of convergence for distance, and as such it is, up to a certain limit purely innervational, since with a very high maximum of convergence (power of adduction) many individuals can not, without practice, co-ördinate even a medium convergence while relaxing

their accommodation for distance. When the distant object is brought near to a patient wearing adduction prisms beyond his immediate power of fusion at twenty feet, the displacement of the images rapidly decreases; they are seen to approach each other and are easily fused. As the object is withdrawn the prismatic effect increases in proportion. Precisely the same adduction can be accomplished at twenty feet by a revolving or variable rotary prism, but not as quickly.

c. When the patient has acquired a power of adduction at twenty feet of 20 degrees (total,=three meter-angles) which is the emmetrope's average maximum relative convergence for distance,[17] the author's method *becomes one of ordinary muscular gymnastics* notwithstanding his emphatic contention that " 'with muscular gymnastics' as such, my plan has nothing in common except the mere use of the prism—very strong prisms, however, instead of weak ones." The writer has made use of prisms up to 50 degrees (total) for convergence insufficiency for the past five years. It is to be noted that the auther has found that with an adductive power of 30 degrees (total) the manifest or latent exophoria is still present, but as the result of the gradual development of the interni by daily exercise with strong prisms, an adduction power of 30 to 40 degrees is attained " until all manifest and latent exophoria has disappeared and 2 degrees of esophoria becomes manifest." The pseudo-esophoria thus induced can fairly be attributed in young individuals to the habit formed of relative over-convergence and probably of over-accommodation, due to continued stimulation of both convergence and accommodation for distance.

d. The author argues that since " muscular tissue, as such, can not be made to double or treble its volume or its strength in a few hours or days, or even in a few weeks," while he can double the extreme adduction (twenty feet) of exophoric eyes in a minute or two by his device, that therefore such increase

of adduction power is not muscular, but central and innervational. This is equivalent to stating that since a man who can lift 200 pounds and can not lift 400 or 600 pounds by main strength, but can balance a stick two yards long on his finger and in a minute or two can so balance one four yards or six yards long; that therefore the balancing is a matter of skill, that is, of innervational coördination, and not of muscular strength. For, a patient who at twenty feet has a maximum prism adduction of 10 degrees (5 degrees base on each eye) converges each visual line but 2.7 degrees which is the deviating angle of a prism of 5 degrees; the visual lines meeting at a distance of about twenty-six inches from the eyes. If by the author's device the adduction power for twenty feet is doubled so that 20 degrees (10 degrees prism on each eye) is overcome, the visual lines would intersect at the usual reading distance of thirteen inches or three meter-angles, representing still a very small quota of the average normal range of convergence, and requiring no unusual effort, nervous or muscular. The convergence is relatively great for distance, but small as measured by convergence after normal habit; in short, it is a feat of relative convergence. That such a degree of relative convergence may co-exist with deficient adductive power is often experienced. Thus, one of my patients who had abduction of 11 degrees and by rod orthophoria, but a maximum convergence of only seven meter-angles, obtained by Dr. Gould's method, esophoria 1 degree, abduction 7 degrees, but the maximum convergence remained at seven meter-angles. In this connection, the opinion of Schiötz is decidedly against the author's theory: "With insufficiency," he states, (*Arch. Ophth.* vol. xix, pp. 178-179), "we find no limitation of the movements of the eyes in lateral rotation, while a considerable defect of convergence may exist. If the lateral movements of the eyes demanded as much muscular energy as is demanded in the movements of convergence, we should be obliged

to conclude that the defective convergence could not depend upon a weakness of the muscles, which perform the whole work in the associated movements; the insufficiency must, in this case, originate from anomalous innervation. Nevertheless, we are scarcely justified in identifying the muscular work produced by two different motions. We have found for normal eyes that the fusion near point lies about six centimeters from the rotation point of the eyes. The angle of convergence between the visual lines will then be about 60 degrees, therefore the rotation of each eye will amount to about 30 degrees. According to Alfred Graefe, the eyes in associated lateral motions can accomplish a version of from 42 to 45 degrees. We find therefore, that the interni when normal and working in the service of convergence, accomplish only about two-thirds of the motion which they are able to give to the eyes when they act associatedly with the externi, and yet (if we grant to the sensations which we perceive in carrying out this experiment, any importance at all), we feel distinctly that the interni are stretched and exerted differently when we converge, than when we use them in associated lateral movements." I am sure that this greater demand upon the interni in convergence is due to *contraction* of the externi, which are kept variably tense in convergence so that lateral movements may be made during convergence; indeed the eyes are rarely equally converged.

e. We may reasonably assume the average physiologic convergence (adduction) point should be as near as ten centimeters=(ten meter-angles = four inches) or a prism adduction power of 60 to 70 degrees (total) since Schiötz has found that what he terms the "fusion near point" should be no farther, this distance coinciding closely with what Landolt terms the average maximum of convergence; viz:[18] Nine and five-tenths meter-angles, and also with the point at which, according to Alfred Graefe, adduction and abduction are each 19 degrees 15 minutes and

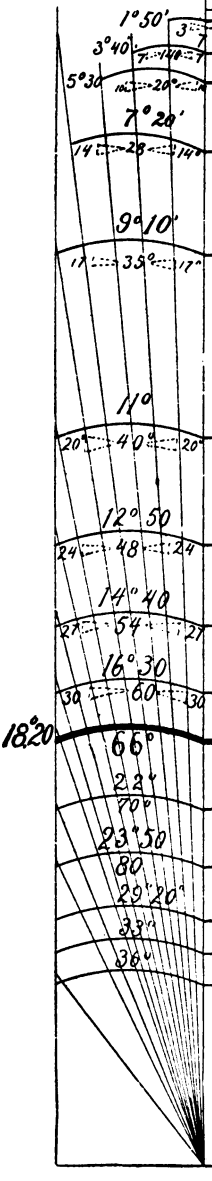

METRE ANGLES	DISTANCE FROM BASE LINE	REFRACTIVE ANGLE OF PRISM (TOTAL)	DEVIATION OF CONEA.
1.	40 Inches	7°	0.4 MIN.
2	195 "	14°	0.8 "
3	13 "	20°	12 "
4	10 "	28°	17 "
5	8 "	35°	2.1 "
6	5.7 "	40°	2.5 "
7	5.5 "	48°	3.0 "
8	5. "	54°	3.4 "
9	4.5 "	60°	3.8 "
10	**4 "**	**66 "**	**4.3 "**
12	3.2 "	70°	5.1 "
14	2.7 "	80°	5.6 "
16	2.5 "		6.9 "
18	2.3 "		7.7 "
20	2. "		8.4 "

Fig. 6.

thus potentially equal.[19] (See Fig. 6.) Now it is of practical importance to know whether a patient has or not this amount of positive convergence at his disposal for if he has not, at thirteen inches he will have no reserve convergence. It can not be determined, either conveniently or promptly by prisms, since as stated above, the habitual relations of convergence and accommodation are thereby disassociated, and even the author's device will not, I have found, enable it to be determined. Thus in testing a patient recently I found adduction at twenty feet was 16 degrees (total)=twenty-two meter-angles. By the author's device this was quickly increased to 26 degrees (total)=three and seven-tenths meter-angles. The direct maximum convergence upon a pin-hole in a card was ten meter-angles, nearly three times his prism convergence in meter-angles. My own prism adduction at twenty feet is 96 degrees (total)=thirteen and seven-tenths meter-angles; with concave lenses to correct the over-accommodation and properly centered (—thirteen D centers fifty millimeters,) it is 114 degrees (total) = sixteen and two-tenths meter-angles; while by direct convergence (pin-hole) it is twenty-two and two-tenths meter-angles, equal to a prism convergence of 155 degrees (total). In another experiment I fused images of a candle flame continuously with adduction prisms of 72 degrees (total) at twenty feet. At thirty inches I could hold the images momentarily with 84 degrees (total), nearer I could not fuse them. An assistant now slowly withdrew the candle and at fifteen feet fusion was easy, up to twenty feet. On approaching the candle it at first remained single, but between fifteen feet and thirty inches the effort increased until at the latter point diplopia again occurred and the images were infusible. Hence it is clear that the device is of no assistance when very strong prisms are used, since the fusion is accomplished mainly by voluntary muscular strength. Dr. Gould appears to underrate the responsive contractile power resident in the interni

themselves, as well as the voluntary power of strongly contracting the interni possessed by persons whose general muscular system is vigorous. I can, for instance, strongly converge my eyes in total darkness, for when I make the effort and the room is quickly lighted, an observer finds them in that condition.

f. But Dr. Gould's reported cases[20] also show that while the innervational features of convergence (which he does not increase but only renders available) can be quickly brought into play, the muscular feature is more slowly developed, as he remarks: "Before an adduction power of 30 degrees has been reached the symptoms of asthenopia will long have vanished, but the manifest or the latent exophoria will still usually, and to some degree be present." To me it seems that no decided muscular exercise begins until prisms 40 degrees (total) are used, necessitating a convergence of six meter-angles (= a point six inches distant) and 60 degrees or more may be necessary. In simple exophoria until such contraction of enfeebled interni is brought about, they are exercised little more than in reading, and until their static power reaches a certain limit through functional activity and consequent increased metabolism, any equilibrium test will show manifest or latent exophoria. The "rhythmic exercise" method of Dr. Savage appears to me the more physiologic treatment.

g. But while the development of the adductive power for distance has a certain value long ago conceded in the treatment of convergence insufficiency, that is of simple exophoria, a large percentage of cases showing a tendency to divergence are not exophorias in reality; says Dr. Stevens:[21] "Indeed, if we select indiscriminately a considerable number of cases of even simple exophoria, and an equal number of cases of even moderate hyperphoria, we shall find that the average converging power in the cases of exophoria, is considerably greater than in the other. . . . The ability to converge is often much more

considerable in cases where there is actual divergence of the optic axes than in some cases in which there is positive convergence." Dr. Hiram Woods in a late paper on heterophoria remarks:[22] "I am skeptical about the adduction. In the first place, as has been pointed out by others, it is a *distance* test only so far as convergence can act independently of accommodation; *i.e.*, to the extent of the positive portion of the relative range of convergence for infinity. Dr. Randall says:[23] "Adduction can be made almost anything, if the patient and examiner have patience. It is striking how rapidly adduction increases as soon as the patient learns how to fuse images of unequal clearness. I have seen adduction of 48 degrees, while the balance test showed exophoria of 10 degrees." Practically, the experiences of the consulting room teach us that even after correction of all refraction errors, attention to the general health, to peripheral reflexes, etc., some anomalies, perhaps innervational, certainly at times abnormal tensions of the muscles of congenital origin, necessitate careful tenotomies or advancements, the results of which can only be successful when the operator's accuracy of diagnosis and technical surgical skill is approximately commensurate with the difficulties in the way of adjusting the mutual balances of twelve muscles. My own tenotomies and advancements have not disappointed me, and I have too often restored lateral equilibrium where actual exotrophia existed, to doubt the efficacy of *complete* tenotomy of the superior or inferior rectus in suitable cases. Ocular gymnastics especially with the stereoscope will do much to readjust inharmonious coördinations, but the fact remains coming from no uncertain authority, that: "We may give the muscles the gymnastic exercise which may be accomplished by the overcoming of prisms. That good may be accomplished in this way I have long ago demonstrated. The fact remains that the method is but tentative. The anomalous conditions remain and

the unpleasant symptoms will probably return. A vast experience with these methods enables me, I believe, to speak of them with some degree of authority, and I do not hesitate to say that while no one can afford to overlook them, they fall far short of the more rational measures of actual adjustments by means of equalizing the tensions in such a way as to establish practical orthophoria."[24]

BIBLIOGRAPHY.

1 Arch. of Ophth., Vol, xx, No. 1.
2 Sight. Internat. Sci. Series, p. 203.
3 Stellwag. Treatise on Diseases of the Eye, 1873, p. 781.
4 Text-Book of Human Physiology, p. 993.
5 Arch. of Ophth., Vol. xviii, No. 1.
6 Sight. Internat., Sci. Series, pp. 129, 130.
7 Arch. of Ophth., Vol. xxi, No. 2.
8 Arch. of Ophth., Vol. xxi, No. 2.
9 Annals of Ophth. and Otol., Jan. 1894, p. 35.
10 Med. News, Oct. 14, 1893, p. 424.
11 Med. News, Oct. 14, 1893, p. 426.
12 Landois. loq. cit., p. 599.
13 Stirling (Landois) q. vid.
14 Foster, A Text-Book of Physiology, Fourth Am. Ed., p. 139.
15 Dr. E. M. Hartwell, Hare's System of Practical Therapeutics, Vol. i, p. 341.
16 Landolt. Bericht, Siebenter Periodischer Intern. Ophth. Congress, p. 45.
17 Schiötz. Arch. Ophth., Vol. xix, pp. 170, 171.
18 Landolt. Ref. and Accom. of the Eye. p. 194.
19 A. Graefe. Arch. of Ophth., Bd. 37 p. 255.
20 Med. News, Oct. 14, 1893.
21 Archiv. of Ophth., Vol. xviii, p. 376.
22 Pan-American Medical Congress.
23 Trans-Amer. Ophth. Soc., 1889.
24 Dr. Geo. T. Stevens paper read before Ophthalmological Section, Pan-American Medical Congress, 1893.

DISCUSSION.

Dr. Edw. Jackson of Philadelphia—The reader of the paper has perhaps made the best use of the time of the Section in calling attention to current errors, which are frequently very misleading to those who are not especially interested in the particular subject. I quite agree with him that the rotary displacement of the image caused by oblique astigmatism is entirely insignificant, but the cylindrical lenses placed before the eye to correct such astigmatism will cause such rotation of amount sufficient to be of very practical importance for the images of all lines not parallel or perpendicular to the direction of the cylinder axis. This rotation is the cause of very serious inconvenience in the first wearing of cylindrical lenses, and this inconvenience

may prevent the wearing of correcting cylinders by persons whose astigmatism has remained uncorrected until after 50 years of age. While in all cases it is the cause of inconvenience, in young persons the inconvenience always passes away in the course of two or three months at furthest. And this ability to accept the suddenly developed and much greater rotation of the cylindrical lens, argues very strongly against any continuance of inconvenience from the extremely insignificant rotation produced by corneal astigmatism.

Dr. Geo. H. Price, Nashville, Tenn.—The paper proposes to put in a state of doubt the question of insufficiency of the obliques, and I will use his diagrams. The claim that this condition is normal, as produced by Prof. Le Conte would be sufficient evidence if he were investigating this peculiar question, but as he is not, then I must differ from his conclusions. It is essential for binocular single vision that the image must fall on corresponding portions of the retina, hence in the cyclophoria induced by oblique astigmatism, or insufficiency of the oblique muscles, you have this disturbed, and this disturbance must be compensated for by a rotation of the eye on its antero-posterior diameter. These diagrams which I hand you will illustrate these points. No. 1 shows the result of observing with each eye where there is no astigmatism, and you will observe that the figure is a rectangle; Fig. 2 shows the same rectangle when seen by astigmatic eyes, while Fig. 3 shows the resultant figure. These points can be demonstrated by the use of cylinders of 3 D. Dr. Price then gave an explanation of the diagrams.

Dr. H. V. Wurdemann, Milwaukee, Wis.—Abnormality is but a relative turn and should be used in a relative sense. For instance, astigmatism of 25 D. in one person may be considered abnormal, while 2.00 D. or more in another gives rise to no inconvenience and may be ignored. There are but few persons in whom it is *not* possible to demonstrate some form of heterophoria and this alleged cataphoria is probably a physiologic phenomena, despite the fact that theoretically, insufficiency of the oblique muscles is quite as probable as those of the recti. I will pass over this and

turn to a subject of practical importance which was considered in the latter portion of Dr. Eaton's paper.

There is no doubt in my mind but that the method of treating exophoria proposed by Dr. Gould, is the best of our present known means for developing the strength of the internal recti. Unfortunately, Dr. Gould has referred the condition of exophoria to insufficient innervation. This is a factor, but those of improper insertion in the recti, increased pupillary distances, actual weakening of the muscular tissue can not be well ignored. In my hands, after a year's trial, I consider that this "gymnastic exercise" (for it is but that) not only increases the prism fusing power for distance, but in a less degree does so for near; it lessens or removes the exophoria for distance as well as the near, and actually increases the convergence for the near point, thus increasing the focal angle and all of this without establishing an over-action of the accommodation. For esophoria I have had less experience, but for the more common condition of exophoria I consider that the majority of cases may be cured by the Gould method, in connection with tonic treatment, more satisfactorily than by surgical or any other known means.

Dr. Southard of San Francisco said, it is undisputed that it is indispensable for binocular image that there should be a clear and well defined image upon the fovea centralis, otherwise the result will be either diplopia or a diffused image. The passage of rays of light through an astigmatic cornea causes an irregular image upon the retina. If the astigmatism is oblique, the proof that rotation takes place in the endeavor to compensate this error lies in this, that between the far point and the near point the axis in astigmatics has been frequently known to change several degrees. A word as to Dr. Gould's treatment of heterophoria by prisms. He has to say that whether the theory be that of innervation or not, the practical results of such treatment have been found of inestimable value to the patient and physician. He is willing to grant that it may be only a gymnastic exercise of the occult muscles. It is claimed by some that its only good lies in the power to preserve binocular vision for distant objects. They claim that when we con-

sider the dynamics of the eye, that it has not the same amount of effectiveness. On the contrary, many cases thus treated have given the best results for continuous work at the near point.

Dr. Kaspar Pischl, San Francisco—As it seems to me interesting to hear the experience of those who have tried Dr. Gould's method, I would like to state that I could relieve a number of patients from asthenopia caused by exophoria at the reading range by these gymnastic exercises. In most cases after a few minutes trial, with prisms, base out, I could find an increase in the adducting power of the recti interim. I hope that the members present will give us their experience on this point.

Dr. H. Bert. Ellis, Los Angeles—Dr. Southard is no doubt right when he says that inequality of the recti muscles may be found in nearly every individual; but we may also say that with every individual the amount of inequality varies from time to time. And if we acknowledge inequality in the recti, it seems to me we should not deny the same condition in the oblique. A year ago I corrected astigmatism in a girl, axis 60 degrees and 120 degrees+0.50 D. Two months ago, clear vision could only be produced with the cylinders at 90 degrees, and it does not seem unreasonable to consider this the result of changes in the oblique muscles.

Dr. Eaton, in closing the discussion, said—In attacking the theories of Dr. Savage, I have in view the objectionable influence upon the therapeutic practice of those who accept his theories. I can not see that the arguments of Dr. Price disprove the demonstrated facts I have submitted. The attempt to asperse the evidence of LeConte and Hering as being the result of strictly scientific experiment unrelated to pathologic conditions, is not justified, since no more patient and thorough investigations could be made. Hering has anticipated every phenomenon of oculo-muscular action that has been mentioned to-day, especially as regards the transition from one secondary position to another. I must again assert that it is impossible to find a human being who has not, according to the tests of Dr. Savage, insufficiency of the oblique muscles, provided the person examined can analyze his visual impressions, which patience will enable

him to do. Dr. Price remarked that when a cylinder is held before the eye with its axis vertical, there is no muscular disturbance and no distortion of the object. Yet any one regarding a square card with a plus or minus cylinder held with axis vertical before one eye, will see that while the sides are parallel, the top and bottom appear inclined. Dr. Southard remarks that a clear image must be seen by each eye; that is, undistorted; yet Dr. Friedenwald has shown that if we place in a stereoscope a representation of the image of an object, as seen by each eye, with a cylinder axis oblique, they appear as if fused into an object having solidity; which proves that distorted images are tolerated, and produce no confusion.

Dr. Price gives no data by which we can distinguish the asthenopia produced by astigmatic refraction and the alleged asthenopia of insufficiency of the obliques; nor does he explain the existence of metamorphosia of individuals who are not astigmatic. No one, in discussing the question of compensatory rotation, in cases of oblique astigmatism, has harmonized the fusion of the horizontal lines with the exaggerated incoincidence of its perpendicular lines, produced by the supposed rotation. In regard to Dr. Würdemann's statements concerning Dr. Gould's method, I quite agree with him, but would again call attention to my experiences as regards the possibility of producing esophoria for distance, while the dynamic convergence power for the near point remains deficient.

REPORT ON THE VALUE OF OBJECTIVE TESTS FOR THE DETERMINATION OF AMETROPIA, OPHTHALMOSCOPY, OPHTHALMOMETRY, SKIASCOPY.

By the Special Committee of the Section on Ophthalmology of the American Medical Association.

EDWARD JACKSON, M.D., Chairman, Philadelphia; S. M. BURNETT, M.D., Washington; H. V. WÜRDEMANN, M.D., Milwaukee; aud J. A. THOMPSON, M.D., Kansas City.

The members of your committee are all in accord with the view held by most ophthalmologists that the objective methods of determining ametropia can not entirely replace the subjective method with test letters and trial glasses; and that, in so far as the subjective method is applicable, it may be regarded as a court of last resort. Determinations of the refraction by the various objective methods, however, constitute an essential portion of the complete examination of any eye. They are essential parts of the whole, and no examination is complete without their use. The subjective method can no more fill the whole bill than can any one of the objective methods alone. All should be used in every case to avoid errors common to each. Although it is obvious that if the various measurements of a definite quantity are accurate, by whatever means they are made, they will agree.

The range of application of the subjective method is strictly limited to the determination of refraction at the fixation point, for patients of sufficient intelligence and honesty, with eyes possessing sufficiently

good vision. It also requires a considerable amount of time for its application, varying with the form of ametropia present; and, where relied on alone, this consumption of time is, for the more difficult cases, an extremely serious drawback and (by exhausting the patience of the surgeon and the endurance of the patient), a source of possible inaccuracy.

The objective methods of measuring ametropia are of value:

1. By effecting a saving of time; and by this, and as confirmatory tests, securing accuracy.

2. They are applicable to cases and to uses for which the subjective method is entirely inapplicable and useless.

Thus the objective methods can be applied to determine refraction in the eyes of small children, in the mentally defective and in the lower animals. Also in the eyes of malingerers, conscripts, applicants for pensions, insurance, or society benefits, plaintiffs claiming damages for injury, or in general wherever the coöperation necessary for the subjective test is lacking, because of lack of intelligence, perversity or self-interest.

Ophthalmoscopy and skiascopy are also applicable to the determination of the refraction of points outside of the macula and outside of the retina, as the prominence of a swelling or the depression of the cup in the optic disc, or the position of opacities in the vitreous.

Again, keratometry (ophthalmometry) and skiascopy are of value in determining certain facts of scientific interest and importance, as the curvature of the cornea either in the visual zone or elsewhere with the ophthalmometer; and the position and limits of the visual zone, and the total refraction of the eye outside of it by skiascopy.

The objective methods are applicable in blindness and in amblyopia of all grades.

As specified in the resolution under which this committee was appointed, our report is concerned

only with ophthalmoscopy, ophthalmometry and skiascopy, and in our opinion these are the objective tests of practical importance. It is concerned, too, only with the value of these tests, not with the methods of performing them. And although their value obviously depends on their form, and the skill with which they are applied, these will only be referred to in that our estimate of their value supposes them to be applied with the skill attainable by careful training and considerable experience, and in their best form. That is, for the ophthalmoscope, we suppose the use of an instrument with a continuous lens series in a thoroughly darkened room, where the patient will have a range of vision of four meters or over, conditions that it is perhaps the exception to find fully complied with in ordinary practice.

The ophthalmometer is to be used with the light from one-eighth of a hemisphere of clear sky, or the best artificial illumination; and so far as it is possible, the eye under examination is itself to be shielded from light. There must be steadiness of the instrument with the patient and surgeon in comfortable positions.

For skiascopy, is required the use of a sharply bounded, sufficiently small source of light, adjustable to the position of greatest accuracy; and a mirror with the sight-hole of not more than three millimeters, free from reflections.

As to the question of the use or non-use of mydriatics, there is no general difference between the subjective and objective tests. Either measures the refraction as it is found at the time of measurement, whether that be the true static refraction or something different. The objective tests are, however, to this extent slightly more favorable to the determination of the true static refraction. With the ophthalmoscope, strictly under the conditions mentioned, there is without a mydriatic, a slightly greater tendency to relaxation of the accommodation than with the test lenses and test letters.[1] With the ophthal-

mometer, the corneal astigmatism which may be the total astigmatism of the eye (but generally is not) is entirely independent of a mydriatic. And, with skiascopy, the total astigmatism present at the time of measurement can be ascertained with more certainty and accuracy than is usually possible with the test lenses in the presence of accommodation.

VALUE OF THE INDIVIDUAL TESTS.

Ophthalmoscopy.—The measurement of refraction with the ophthalmoscope enables us to immediately assign an approximately just share to the influence of ametropia in causing imperfect vision. The first ophthalmoscopic examination will in general give us the basis for a preliminary or approximate diagnosis of the refraction; the lens required to give the clear view of the fundus informing the observer of the hyperopia or the myopia present, and the distinctness of the view that it gives indicating the presence, degree and regularity of astigmatism. And all this is accomplished in perhaps a fraction of a minute.

The ability to measure by their refraction the relative position of different points seen by ophthalmoscopy, gives it an important value very imperfectly shared by skiascopy alone.

Of the ability of the ophthalmoscopic examination to reveal latent hyperopia, there must always be some doubt, for in a certain proportion of cases it fails to accomplish it. In this matter of rendering manifest the total hyperopia, it has not, in our own experience, shown any very pronounced superiority over the subjective method. Of the exactness of the determination made with it, we accept the statement of Loring

---

[1] Ophthalmoscopy without a mydriatic is relatively of greater value in revealing latent hyperopia than the subjective tests, but when the eye is under a mydriatic, the subjective method in intelligent patients is a superior test.—H. V. W.

[2] As the instrument is now made with a low degree of magnifying power and from the coarse adjustment of the lines thereupon ensuing, I do not consider it reliable for the corneal measurement under 0.25 D., but as this is the usual interval of the weaker lenses, this is sufficiently accurate for practical purposes.—H. V. W.

that it will measure hyperopia or myopia to within 0.5 D. or recognize the presence of 0.75 D. of astigmatism and the direction of its principal meridians.

It must be clearly understood, however, that this accuracy can not be attained by all observers, or by any observer at all times and in all cases. There are some surgeons who fail to learn how at any time to completely control their accommodation, at least until an age is reached when the accommodation normally ceases to be a factor to be dealt with. And, what is of more importance, all observers with considerable accommodative power are, after periods of prolonged or difficult eye work, likely to find their control of accommodation impaired, and their measurement of ametropia with the ophthalmoscope unreliable. Thus after a somewhat prolonged effort to obtain a clear ophthalmoscopic view of the fundus of an eye presenting astigmatism, the subsequent ophthalmoscopic determination may vary quite notably from accuracy.

The most serious hindrances, however, to constant accuracy of the ophthalmoscopic examination of ametropia are those dependent on the eye of the patient. If the patient's pupil be unduly small, the accuracy obtainable by this method is correspondingly diminished by the diminution of the circles of diffusion on the observer's retina. On the other hand, if the pupil dilate moderately, as it does in the majority of cases in a thoroughly darkened room, portions of the dioptric media will be exposed at the margin of the pupil that differ materially in their refractive power from the visual zone, and thus the refraction which may really be obtained by the refraction ophthalmoscope will differ essentially from the refraction of the visual zone which is sought,

On these accounts, the best observers we have known have been liable at times to inaccuracies of one or two dioptres in their ophthalmoscopic determinations of moderate ametropia, especially astigmatism, and in high myopia, more especially with

astigmatism, the error is even greater, sometimes amounting to four or five dioptres.

Ophthalmometry.—Ophthalmometry would be more appropriately named *keratometry.* Had it been so designated from the start, some current errors with reference to its significance and value could scarcely have arisen. It measures the curvature of the cornea and this curvature alone. Its value as a test of ametropia, is entirely dependent on the relation of the corneal curvature to the total refraction of the eye.

What we have to say, refers to the instrument of Javal, the only one that has proven of importance in ordinary practice. As commonly used, it does not measure a continuous curve, but simply the angle between the two points of the cornea from which the margins of the mires (which constitute the extremities of the test object) are reflected. Between these two points or anywhere beyond them, the curvature of the cornea may essentially differ, though as a rule this curvature in the region measured is practically regular.

By measurement of the curvature in different meridians, the existence and amount of corneal astigmatism is determined to within 0.25 D., or less if the patient be steady, the other conditions favorable and the observer's vision not impaired by irradiation.[2]

The directions of the principal meridians of the corneal astigmatism are also determined with an accuracy dependent somewhat on the amount of astigmatism, but even for low degrees with practical exactness. Thus for astigmatism of 1 D., the principal meridians may be determined within 5 degrees. In a few cases, the meridians of greatest and least curvature vary noticeably from a right angle with each other. In such eyes, the direction of the meridians of the part of the astigmatism that is regular, (that is, the part which can be corrected by a cylindrical lens), must so far as ophthalmometry goes, remain in doubt.

We do not find marked variations in the curvature of the cornea at different observations, but believe that where such variations are noted, they are usually either due to unsteadiness of the patient's eye, causing a different part of the cornea to present, or where noted at different times, may be due to changes in the adjustment of the instrument.

What the ophthalmometer reveals is entirely independent of the influence of mydriatics; the curvature it measures, remaining precisely the same in all conditions of accommodation or when the accommodation is entirely paralyzed. But the ophthalmometer being simply a keratometer, gives no information as to the degree of hyperopia or myopia present; and only indicates what may be the total astigmatism if that conforms to the corneal astigmatism. Of the conformity of the corneal to the total astigmatism, statistics now before the profession enable us to judge. From them we draw only this conclusion, that the chances of conformity between the corneal and total astigmatism are not sufficient to justify reliance upon the ophthalmometer as a means of showing the cylindrical correction required in the individual case.

The practical value of ophthalmometry, therefore, is mainly that of a method of examination that will make an important suggestion as to the presence, degree, or direction of astigmatism, which when followed up by other methods of measurement, may effect a greater saving of time.

In addition to this, it is possible that when accurate ophthalmometric records have been made of the curvature of a cornea, subsequent changes in its curvature may indicate the occurrence and amount of change in the total astigmatism.

Aside from these practical applications of the instrument, it has a scientific value, and must be regarded as offering a necessary method for the elucidation of certain important scientific problems as to the existence and change of ametropia.

Skiascopy.—Skiascopy is on the whole the most accurate and reliable objective method of estimating ametropia. It measures the total refraction of the eye, whether this be the static refraction or the refraction modified by accommodation. Applied in the direction of the macula, it measures in the visual zone exactly the refraction that is measured by the subjective method; and at the same time, it measures refraction outside of the visual zone, as it is possible to measure it in no other way.

For eyes having a distinct and sufficiently extended visual zone, it is accurate to within one-eighth of 1 D.[3] In its power of detecting latent hyperopia, that is, of allowing latent hyperopia to become manifest while the measurement is being made, it does not differ materially from ophthalmoscopy or from the subjective test. But, it is, if anything, slightly inferior to them.

The accuracy which is possible with skiascopy in the individual case is limited mainly by the definiteness or indefiniteness of the visual zone. When a certain portion of the dioptric media, large enough to be readily identified and studied, has the same refraction and is definitely bounded, the degree of ametropia of this portion, its hyperopia, myopia, or astigmatism, can be determined within the limits of accuracy named. When, however, this visual zone is too small to study at a convenient distance or the refraction passes by imperceptible gradations into entirely different refractive conditions surrounding it, the difficulty of applying the test is greatly increased and the accuracy and certainty of its results diminished.

The eyes in which a definite visual zone can be isolated and studied are the rule; those in which this is not possible the rather rare exception. The degree of accuracy attainable in these latter cases will depend almost wholly on the minuteness of the study, a minute study being only possible at a com-

[3] May be this accurate in some instances.—S. M. B.

paratively short distance with especially arranged conditions of illumination. Such a study requires great care and patience, but with it even high grades of irregular astigmatism will often yield a distinct visual zone capable of comparatively accurate correction by lenses, which the test will indicate.

Skiascopy, therefore, offers for most eyes, a method for the easy and rapid measurement of ametropia, within the limits of practical accuracy for even the subjective method, except in eyes having more than the Snellen normal standard of visual acuteness. For the exceptional eyes, in which it is less accurate, it offers a means, which, carefully used, will give confirmation of subjective results, or a better correction than may be obtained by any other method. In nearly all eyes the result of a careful skiascopic correction will give the best or very nearly the best obtainable vision.

In addition, skiascopy informs the surgeon, as does no other method, in what portion of the dioptric surfaces the visual zone is situated, and gives him definite knowledge as to what changes in the optical requirements of the eye will be brought about by a change in the size of the pupil. It may, therefore, be relied on to indicate (while the pupil is dilated) whether in the individual case a repetition of the subjective test is especially required or advisable, after the recovery from the influence of a mydriatic.

In conclusion, your Committee would urge that the accurate determination of ametropia is best accomplished by the use of all of these objective methods in each case, and usually, in the following order:[4] The ophthalmoscopic examination, measurement of the cornea with the ophthalmometer, skiascopy—these to be followed by the subjective determination, and,

[4] I prefer to use the ophthalmometer before the other two forms of objective examination, since by it in a moment the amount of the corneal astigmatism is acquired and which may be taken as a guide in ophthalmoscopy and skiascopy in the search for the total astigmatism. Especially as the final measurements by the latter test are usually made under mydriatic, and keratometry may be done during the first few moments of a preliminary examination.—H. V. W.

if this last does not agree with the previous measurements, its findings should be submitted to re-trial by skiascopy.

Even when this plan is followed, the accuracy of results obtained will depend on the experience, habitual accuracy of observation, physical health, mental alertness, and conscientious care of the observer. But without some such plan, the best observer will fail to do his best work; while with it, the poorest will be able to make the most of such skill as he has.

RETINOSCOPY AS A CRUCIAL TEST IN MEASURING ERRORS OF REFRACTION.

BY B. ALEX. RANDALL, M.A., M.D.
OPHTHALMIC AND AURAL SURGEON TO THE CHILDREN'S HOSPITAL, ETC., PHILADELPHIA, PA.

Except in the early-demonstrated value of retinoscopy in the recognition of conical cornea, as set forth by Bowman, the claims for the method seemed decidedly exaggerated by Cuignet and other early advocates; and my study of it (as practiced with the concave mirror) affording no prospect of large usefulness, I dropped it almost entirely. In the spring of 1884, however, I began to employ the plane mirror in the test, and have ever since held it to be the most delicate objective test in measuring the refraction and its anomalies. Believing it to be unequalled in certain respects by any other procedure, I desire here to define the limits within which I particularly value it; and this the more, as I believe I differ from the general practice.

In my routine examination of a patient, retinoscopy follows the subjective tests for far and near of the vision and muscle balance. In the moderately darkened room, with an argand burner shaded by a metal chimney presenting an opening an inch and a half in diameter, the light is thrown by a plane mirror from a distance of three or more meters, while the patient gazes at a dark surface behind me. Under these circumstances a medium pupil (four to six millimeters, is almost invariably obtained, in which there is rarely any difficulty in seeing and determining the motions of the shadows. M. and H. are thus readily differentiated, with the presence and axis of any astigmatism, and a rough quantitative estimate

can be made from the distinctness and rapidity of movement of the shadow. Mixed astigmatism, usually the most difficult error to uncover, is by this method the easiest and most unmistakable. With very narrow pupils, hazy media or unsteady patients, some little difficulty may compel a closer approach; but if the examiner's head be a little lower than the patient's, this can generally be avoided and the test satisfactorily made at even greater distances. As the pupil is not strongly illuminated, the mirror must have an ample sight-hole, free from annoying reflections.

Having thus qualitatively determined the refraction, I then pass to the ophthalmoscopic examination in the upright method, and while investigating the media and the tunics, measure the degree of any refraction error. The corresponding glass or combination is then placed in the trial-frame before the eyes and its accuracy tested—by the test letters, if desired—or where the subjective tests can not be trusted, I proceed at once to the crucial employment of retinoscopy.

For this, some painstaking in the illumination may be required in order to give readily the desired accuracy. Theoretically, we should obtain the emmetropic appearance at a distance of four meters only when M=.25 is present. Practically this rarely holds good, probably because the pupil is wide enough in most cases, even when no mydriatic has been employed, to give a peripheral refraction higher by thus much than that at the pupillary center, and also because we usually compare results with the subjective correction for six millimeters, which is slightly overcorrecting for distance. I look therefore, for a central, comma-like shadow, rotating or varying with the shifting light, yet moving neither against nor with the motion of the light upon the face. If this be obtained with +.75, for instance, it will be found that +.90, the old 42, gives a distinct myopic shadow moving in the pupil against the mirror, while +.65

is as clearly an under-correction and gives a shadow moving with the mirror. So it is fair to claim that errors as small as 0.1 in any or all meridians can be recognized by this method under favorable conditions. Indeed, I have seen cases where 1 D. was as clearly too strong as .90 was too weak; and one could assert that there was not so much as .05 D. of astigmatism. For this minuteness of measurement is as true of one meridian as of all; and the axis of any uncorrected astigmatism can generally be determined within 5 degrees with the same ease and accuracy. It seems just to say, then, that this is the most minutely exact measure at our command.

It is a tedious business to do the coarse focusing of your microscope with the fine adjustment screw; and in like manner this method is not the readiest for the work intermediate between the rough qualitative and the minutest quantitative measurement. For this Dr. Jackson's method with the artificial far-point excels it. But within its proper field the plan deserves fuller recognition and employment; and only the "too old a dog to learn new tricks" is likely to fail of satisfaction with it.

I have sometimes met the claim that special skill or exceptional sharpness of sight are requisite to succeed with this method. My possession of V=6/IV. is doubtless no drawback in the use of it; and practice unquestionably facilitates control of the illumination, so as promptly to throw it into the pupil four meters away, and then precisely to make the small rotations of the mirror requisite to give the play of shadow in any desired direction. But I can not perceive that I have in ten years much improved beyond the skill gained in the first few months; and I have frequently brought a doubting tyro to unhesitating recognition of errors of 0. 1 D. in a demonstration a few minutes in duration. The artificial eye, especially that of Frost of London, is an excellent aid to the beginner, although in some respects

work with it is more difficult than with a tractable patient.

Finally, a word as to the utilization of this hair-splitting aid to accuracy. With intelligent, sharp-sighted patients the subjective tests are doubtless the most satisfactory for deciding minute differences; and the coöperation of the patient and his subsequent loyalty to your decision, can generally be thus best secured. Yet the objective tests often greatly aid us to help a doubtful patient to a decision, and the moral effect of independence of his answers is in every way good. With patients less well endowed, as so many are, retinoscopy rises rapidly in importance; and in intractable cases it can easily guide us when nothing else but the direct method can be used. The expert in this procedure may ask for nothing better, although it is a question if one can at all times control his accommodation and precisely allow for his own refraction; and where Loring was doubtful about accuracy to fractions of a dioptry, he who would be correct to one-tenth must be an ophthalmoscopist indeed. Even to such a one, it may at times be a great gain to be so precise when fatigue or headache has set the ciliary muscle in a worry.

It is in the public clinic, where much of the detail work must be delegated by the chief, who must yet shoulder the responsibility of it all, that this method of retinoscopy has its most striking value. In one of my services, where a dozen or more refraction measurements had to be made each day, it was easy to give by the ophthalmoscope a rough estimate of the refraction to an assistant, who might be a mere beginner; and when he had finished his subjective tests and marshalled into the dark-room his patients wearing the correcting lenses in accord with his findings, it took a very few seconds to verify or revise his work in each case and to prescribe the glasses with full assurance of the precise error of refraction. Any error in the position of a cylinder or the strength of it or of a spherical could be at once detected, rectifi-

cation made, and the result verified. Some men do not desire this accuracy in their hospital work; others will not take even this small trouble to obtain it; but to the conscientious ophthalmologist it is clearly needful, and it will be readily possible by this method of retinoscopy.

THE STATUS OF SKIASCOPY.

BY H. V. WÜRDEMANN, M.D.
MILWAUKEE, WIS.
DIRECTOR WISCONSIN GENERAL HOSPITAL; OCULIST AND AURIST TO THE CHILDREN'S HOSPITAL, AND TO THE MILWAUKEE HOSPITAL FOR CHRONIC INSANE; INSTRUCTOR IN EYE, EAR AND THROAT, ELMS HOSPITAL; AND TO THE MILWAUKEE COUNTY TRAINING SCHOOLS, ETC.

It is conceded beyond all doubt by those practiced in the objective methods for determining the ocular refraction, that skiascopy holds the first place as regards accuracy and minuteness of measurement. This you have learned from the special committee appointed last year and empowered to report at this meeting. The sum of our report may be put in one sentence: *The objective tests are essential to the proper examination of the ocular refraction and, although but preliminary to the subjective method, reduce the latter to simple proving of lenses found by the former, eliminating in a great measure dependence on the faltering judgment of the untrained patient, substituting therefor the skill of the expert who, reasoning from scientific data, is thus able to fit glasses in less time and more accurately with consequent satisfaction to himself and his patient.* Keratometry, ophthalmoscopy and skiascopy; "the greatest of these is" skiascopy. Thus in a few words you have the standing of the method designated by those familiar with the same.

This paper is not written for these, but for those on the outside who, either through ultra-conservatism, laziness or inability to master its minutiæ, have not yet taken up the shadow test. It is a painful fact that there are men, in other respects good ophthalmologists, whose refraction work is but on a par with that of the glass-selling jeweler and the aver-

age optician. They pin their faith to the trial set and to the patient, whose hesitating replies are a constant source of error. As refraction examination forms fully one-half of the oculist's work, such must give way to those skilled in *measuring the eye.*

The estimation in which skiascopy is held by our eastern *confrères* is shown by the fact that a whole week is given up to the teaching and application of *this method alone* at the Philadelphia Polyclinic, in a series of twenty-seven lectures and clinics by a large corps of professors, instructors and clinical assistants.[1]

From the perusal of recent English and German literature, it would seem that even though the shadow test has been in common use in this country and France for a decade, the profession on the other side has not taken up the method to the extent that we have. In this country, I think that it may be said all of the progressive workers use it and do not consider the refracting of any case complete unless skiascopy has been called into service. Within a couple of years the acquisition of this method will be deemed as necessary by the foremost specialists of all the world as it is here. Six years ago I was astonished by the ignorance of the German oculists regarding skiascopy, as it was then, as now, foremost in my mind as being the principal objective method of measuring the eye. It is different now, and I understand that the shadow test is being generally taken up even in the clinics of Germany. Personally, I voice the opinion of its value given by your committee, and use it a number of times a day in my private practice.

In what cases should the shadow test be used? I should say in *all* patients for whom lenses are to be prescribed. I hold it to be an absolute necessity for the scientific refractionist to know in every instance the total refraction of the eye before putting on lenses. I would no more think of fitting spectacles to a presbyopic patient, by trying lenses at the near

point alone without knowing his refraction, than I would of prescribing glasses in ametropia by one or more of the objective tests without recourse to the subjective method for confirmation.

The few instances in which skiascopy is unreliable or inapplicable are limited to those cases in which a definite visual zone can not be isolated. These eyes are the exception and yet where carefully used, in irregular corneal curvature, in conical cornea, in partial lenticular or corneal opacities and in very high grades of astigmatism, skiascopy is of value as a confirmatory test. "In nearly all eyes the result of careful skiascopic examination will give the best obtainable vision."[2]

For skiascopic results to agree with those elicited by prolonged subjective tests, the examination should be conducted in the visual line, the refraction of the macula only being measured. Skiascopy measures the static refraction of the eye when applied in the visual zone, exactly as it is at the time of the examination, whether modified by the accommodation or not. Thus, in young persons, as a rule, a mydriatic should be used. Skiascopy is of value in proving of measurements found by the other methods, just like the proving of an example in vulgar fractions: By again applying the shadow test with the combination of lenses decided upon from the trial case. It may thus be used as a check upon the other methods and upon itself.

Aside from the difficulty of acquiring the technique, (although not nearly so much time is taken by the tyro in learning it as is necessary for accurate ophthalmoscopic measurement), I would consider that the want of proper facilities for placing correcting lenses before the patient has been one of the greatest obstacles to the general adoption of the method. If it be remembered that but one meridian can be considered at a time, and that the neutralization or reversal of the shadow movement by spherical lenses accomplishes the same purpose for the meridian

under observation as cylindrical lenses, much of the difficulty is done away with. The placing and replacing of lenses in a trial frame is very consumptive of time, and the test case itself occupies too much space in the ophthalmoscopic dark room, which is usually but a closet.

To obviate these disadvantages, Doyne,[3] of Oxford, Eng., in the Ophthalmic Section of the International Congress held in Washington in 1887, exhibited a large rotary disk containing many plus and minus lenses. Burnett's[4] and my own[5] rotary disks, modifications of this, were more simple, but mine at least has been laid on the shelf for several years, as being too cumbersome. The simple hand skiascope,[6] here shown has all their advantages and the model I present has been used in my work several times a day for nearly four years, and I understand has been given a place by a number of our colleagues. This you see is a simple blade of hard rubber which contains twelve plus and twelve minus lenses. The patient raises and lowers the instrument at the word of the examiner until the neutralizing lens is found, the strength of which is always plus .75 D. greater than that of the actual ocular refraction in this meridian, and this over-correction should be allowed. The sphericals found by direct ophthalmoscopic examination are usually worn by the patient in a separate frame behind the instrument. I find it convenient to have a couple of pairs of reversible spectacle frames in my dark room containing the one a + 1. D. and + 2. D. lens, and the other a + 3. D. and a + 4. D. lens; the strength of which when used for higher degrees of hyperopia is added to that of the instrument.

This simple instrument overcomes the principal difficulty in the use of the method. Thus skiascopic examination as practiced by myself and colleagues takes but a minute or two, the test itself giving mathematical data from which scientific conclusions are reached.

805 Grand Avenue.

REFERENCES.

[1] Advt. Philadelphia Polyclinic. 1894.
[2] Report Special Committee, Section on Ophthalmology, Amer. Med. Asso. Transactions. 1894.
[3] Doyne, Trans. Internat. Med. Cong. Washington. 1887.
[4] Burnett, Swan M. Skiascopic Disk. Advt. Queen & Co. 1890.
[5] Würdemann, H. V., "The Use of Skiascopy." Amer. Jour. Ophth. May, 1890.
[6] Würdemann, H. V., "A Simple Skiascope." Amer. Jour. Ophth. Aug, 1891.

THE VISUAL ZONE OF THE DIOPTRIC MEDIA AND ITS STUDY BY SKIASCOPY.

BY EDWARD JACKSON, A.M., M.D.

PROFESSOR OF DISEASES OF THE EYE IN THE PHILADELPHIA POLYCLINIC; SURGEON TO WILLS EYE HOSPITAL.

PHILADELPHIA, PA.

One is liable to get the impression that, in eyes with perfect vision, only focused light reaches the retina, although the incorrectness of such an impression is readily demonstrated in various ways.

If we close the lids in any strong light, we can demonstrate that sufficient light reaches the retina through them to give quite accurate quantitative perception; and about the same amount of this light reaches the retina through the lids and the sclera when the eyes are open and in use for distinct vision. The ability to light up the interior of the eye by oblique illumination through the sclera or iris, we have all demonstrated. But skiascopy has shown that even through the pupil, always in the dilated pupil, often in the pupil as contracted by the ordinary daylight, a considerable part of the light entering, often the greater portion of it, reaches the retina unfocused.

While a flood of such unfocused light renders very accurate vision slightly more difficult and tiresome, it does not prevent it. The conditions may be likened to those that are obtained when a convex lens is held so as to form an image on a piece of paper in a well lighted room. A large part of the light reaching the paper is not focused light, and the image formed is on that account less vivid, yet more careful examina-

tion shows that it is comparatively distinct and quite complete. When the mixture of diffused and focused light falls on the retina, the former seems to interfere still less with the perception of the image formed by the latter, so that a comparatively small proportion of accurately focused light with a much larger amount of uniformly diffused light will still enable one to see distinctly.

The portions of the dioptric media through which the light is perfectly focused upon the retina I have termed the visual zone. Existence in the pupil of a visual and extra-visual zone, with some of the facts dependent thereon, have been impressed on me by prolonged use of the shadow-test, and I am conscious of having very slowly come to some realization of their full significance and importance. They have a most important influence upon the practical application of all methods for the measurement of ametropia, but the exact nature and significance of that influence is only revealed by skiascopy.

The fact that we are able to see by the focused light in the presence of much that is unfocused, enables us to use the subjective method; and the fact that only the focused light impresses consciousness by recognizable sensations has, in a large proportion of cases removed the subjective test from the inaccuracies and uncertainties that would otherwise be due to the admission of light through the extra-visual zone.

The existence of an extra-visual zone presenting refractive conditions entirely different from those of the visual zone, is a great obstacle to accuracy with the direct method of ophthalmoscopy. With skiascopy, however, the observer has spread before him, as it were in a complete map, the pupil in each portion of which the refractive conditions may be separately studied, and it is this opportunity offered for isolating and studying alone the different refractive conditions that occur in the same eye, that is the supreme advantage that skiascopy has given to the

ophthalmologist. All else that it does can be done by other methods, and in other respects it is only the time-saver or confirmer of other methods. In this it stands entirely alone, and the information that it gives is just that which was needed to make practical physiologic optics an exact science.

The practical importance of the study of the visual zone, and the relation of its refraction to that of other parts of the dilated pupil is very great, and the facts revealed by such a study will powerfully influence the prescription of correcting lenses. How great this importance is and how much the practice of lens prescribing is likely to be influenced will only be appreciated by one has made at least a few careful studies of this kind. Leaving it aside for some future communication, I wish simply to speak now of essential methods for such study.

The area of the pupil that may be regarded as having the same refraction depends on the exactness or minuteness of discrimination that it is desired to make. If one says roughly a certain eye is hyperopic or a certain eye is highly myopic, this may apply to the whole dilated pupil. If he says the eye has so many dioptres of hyperopia or so many dioptres of myopia, and is willing to ignore variations of less than 1 D., what he says may apply to the whole of the pupillary area as it exists under conditions of ordinary illumination. But, if he desires to be more discriminating, to recognize the smallest differences of refraction that can be recognized by skiascopy, he will find in almost all cases that such a pupillary area presents marked variations. And, in a certain number of cases of eyes that would not ordinarily be regarded as exhibiting conical cornea, or marked irregular astigmatism, the area of the pupil even contracted by strong light and for near work will show variations in refraction of the greater part or a whole dioptre.

From these facts, it follows that the accurate application of skiascopy, the careful study of the visual

zone and the relation of its refraction to that of the surrounding proportions of the pupil is a study of the *movement of light and shadow in small areas* of the pupil, not across the pupil as a whole.

To study a small object one must bring it near the eyes; hence such studies of the pupil must be made within a comparatively short distance. Distinct movements in an area three millimeters in diameter can not be conveniently studied beyond the distance of a meter and can be most readily studied at a considerably shorter distance. There are not a few eyes capable of visual acuteness quite up to the normal standard, in which the light that goes to form definite images enters through a smaller area of the pupil than this, and the true refraction of the eye, therefore, can be studied only at a shorter distance; a distance of one-half or even one-third of a meter.

Again, to have a distinct area of light in such a limited space, it becomes highly important that the source of light be small. Such a study can not be made unless the ordinary lamp flame be covered with an opaque chimney with a small aperture. For my own work, with the plane mirror, I have for the last year found an aperture giving a circle of light five millimeters in diameter most satisfactory. With such a source of light, properly placed close to the mirror, and the sight-hole of the mirror not more than two and a half or three millimeters in diameter, the study of the movement of light and shadow is as easily made at one-half meter, revealing the differences of refraction in different parts of the pupil, as is the rough study at one millimeter distance or more, by the methods ordinarily described which have so frequently misled the surgeon.

Recently, some of the best skiascopists have spoken of the test as being in some cases misleading. I am sure that it is misleading only when the movement of light and shadow is studied in the wrong part of the pupil. If one recognizes the true visual zone, and goes close enough to study the movement within it,

the movement of light and shadow can no more mislead him as to the condition of refraction than a convex lens can have the effect of a concave.

We are dealing with simple physical facts. The misleading, I believe, invariably comes about by the surgeon's watching the movement of light and shadow in the extra-visual zone, and the chances of falling into the error are directly proportioned to the distance of the surgeon's eye from that of the patient and the consequent apparent smallness of the pupil.

With great variations in the state of refraction present in almost every eye, with the most of ophthalmic surgeons applying skiascopy in such a way that it was impossible to discriminate between the visual and the extra-visual portions of the pupil, it was no wonder that the test was regarded as one of uncertain value and not to be entirely relied upon. With the recognition of the real optical conditions to be dealt with, this uncertainty and distrust will disappear and the test will take its place for certainty and accuracy along side of the subjective test for intelligent, honest patients with perfect vision, and as distinctly superior to the subjective test in all other cases.

Such an application of the test is a very different matter from its use for a rough approximate determination of the refraction in which it has heretofore rendered most service. The phenomena to be dealt with opens an opportunity for the exercise of the highest skill in observation and the application of the most considerable experience. In my judgment, no other method of studying the refraction of the eye compares with the full application of the shadow test, either as to the possible value of the results to be attained or in the difficulty of the *complete* mastery of the method.

To demonstrate roughly the general refraction of of the eye, skiascopy is the easiest objective method. It may be grasped even by the tyro in a single lesson. But to reveal its full possibilities of delicacy and

accuracy it will always require years of careful and intelligent application.

DISCUSSION.

Dr. F. B. Eaton—In the employment of the several objective tests under discussion without mydriatic, I prefer to begin with skiascopy. since a certain amount of accommodative adjustment is brought about by the subjective tests and by the fixation by the patient of the tube of the ophthalmometer.

I employ the ophthalmoscopic mirror with Dr. Würdemann's skiascope and without a mydriatic. If the pupil is small, the patient must fix some object considerably to the right or left that a reflex may be secured; hence the importance of a very dark room and covered flame. I occupy a middle ground between the extreme views of those who eulogize and those who take as partial only the findings of Javal's ophthalmometer. I believe that many of the discrepancies between its findings and those under mydriasis result from imperfect illumination, and because the patient's head is not level. This latter defect can be remedied best by the American model, which provides a horizontal slit through which the observer can insure the levelness of the patient's brows with the top edge of the slit. Again, the patient must fix a point on the anterior lens of the instrument, which is in its axis, since then the observer measures the cornea at that portion cut by the visual line.

Dr. S. B. Davis, Stockton, Cal—In my use of the ophthalmometer, I have found that I had better results in most cases by placing the axis at 90 degrees, if the instrument showed it to be near 90.

Dr. Simonton, San José—While the objective methods mentioned are theoretically within certain limits correct, yet it is a fact in practice that many mistakes are made by those relying almost wholly on these methods. Many of these cases require refitting, and ordinarily by use of the old trial case. Inasmuch as the various objective methods afford latitude for the exercise of much judgment, it is evident that all ophthalmologists are not equally endowed with skill and acuteness of judgment and this, accompanied by usual haste, results in many mistakes.

Dr. R. D. Gibson, Youngstown, Ohio—The results are not always the same in the same eye. A case showing plus .50 D. astigmatism may, after some months of over-taxation in school, return with conjunctivitis and an increase of the corneal astigmatism. This increase I have seen reach as high as 4. D. and after relieving the conjunctivitis and blepharospasm, the high degree of astigmatism vanishes and the results of the first examination found to be correct. Again, I have found astigmatism for which I have prescribed correcting lenses with great comfort and satisfaction, and after some months or a year, find no astigmatism, and only a spherical correction necessary.

Dr. Fred Baker, San Diego, Cal—To repeat much that has been said, I wish to plead for greater charity in our treatment of our brother practitioners when we are called upon to overhaul their work. I have grown more charitable since finding that as large a share of my own cases show slight changes in a second test made after six months or a year, as of those which come to me from other practitioners, though I know that the first tests of my own patients were carefully made. Every one must find that certain patients show these changes after a time, which must be due to the relief of strain given to the ciliary muscles by the wearing of the first pair of glasses.

As to objective tests, while it must be true that all of us in the rush of business neglect to give sufficient time to all patients, still it must be admitted that the oculist who combines most methods of testing will do more accurate work than he who uses only one. I have yet to meet personally any ophthalmologist who has given any of the objective methods a full and careful trial, who has not admitted the practical value of the method.

Dr. W. E. Briggs, Sacramento, Cal—I agree with Dr. Riley in the statement that the trial test case will be our last and most important means of ordering glasses; but the more the profession uses the objective methods the more general they will become. I believe in time all ophthalmologists will use both skiascopy and Javal's ophthalmometer. These methods of testing are not always necessary, but cases are common in which we can not readily obtain a

result without some objective test. As for myself, I would feel quite at a loss to make my examinations without the ophthalmometer and skiascopy.

Dr. Albert R. Baker, Cleveland, Ohio—I am pleased with the report of the committee in that they have given great prominence to skiascopy as an objective test for the determination of ametropia. In 1891-'92 I spent considerable time in the Royal London Ophthalmic Hospital (Moorfields) about the time skiascopy was first introduced in that institution. Probably one-half of the patients applying for relief could not read and we found this objective test of great value in these cases. Upon returning to this country in 1883, I published several papers on this subject but as they received but little consideration I became somewhat discouraged in attempting to secure a hearing. I was greatly pleased when Dr. Jackson took up the subject and succeeded in placing this objective test where it belongs as one of the most valuable. No doubt the present excellent report will serve to make the use of skiascopy more general.

Dr. L. R. Ryan, Galesburg, Ill—The use of the old trial lens should not be discarded. The thoughtful physician and progressive man will use all the methods at his command. It is in the majority of cases a matter of personal preference. The man who studies skiascopy carefully and uses it extensively can do better work than one who devotes little time to it. The same might be said of the other methods of refraction. When we consider that the majority of cases of refraction are simple; that is, the axis of astigmatism are regular either 180 degrees or 90 degrees, and that the patients are people of average intelligence and perception, by the use of the trial case we can fit glasses more rapidly and accurately. We have all the benefit of the patient's intelligence as to clearness of outline and ease of glasses. By a careful study of subjective symptoms one can tell almost by intuition what the refractive error is, and in the vast majority of cases can make a rapid fit. In suitable cases, however, skiascopy and all the other methods are excellent, and should be used, but the old trial frame still has a place and an important one.

Dr. H. V. Würdemann—Our branch of therapeutics is the

most scientific of all the branches of medicine and this refractive work is or should be the most accurate, as it is based upon physical and mathematical data. The physician who bases his glass fitting upon such ground necessarily does better work than those who depend entirely upon unskilled testimony of the patient. In the opening sentence of the report of your Committee, the fact was stated that the objective tests were a necessary preliminary to the subjective method, and the latter is not to be done away with, but is the court of last resort. We may even go further with the subjective method, and say that the final judgment of the patient himself after he has had our prescription filled, is a highly important point. Thus we can not do without the trial case. The advantages of the objective method have been set forth in your committee's report and I need not repeat them here.

One of the most important offices of the objective method is the clearing up of doubtful points excited by the subjective examination. Thus at the trial case a patient may accept equally well one or any of the following combinations:

Plus .50 sph. ⊂ plus 1.25 cyl.

Plus .75 sph. ⊂ plus 1.00 cyl.

Plus 1.00 sph. ⊂ .75 cyl.

Without repeated sittings, by the trial set alone it would be difficult for the operator to decide which would most nearly neutralize the patient's error of refraction. Skiascopy settles the question immediately to the skilled operator. There has been some question raised as to the fixation of the patient's eyes. The examination should be conducted as nearly as possible in the visual line of the patient. Fixing the aperture of the mirror would do this, yet reflection of the same on the anterior surface of the cornea would confuse the operator, and when used without a mydriatic, the bright light falling most directly upon the fovea would tend to produce iritic and ciliary contraction. For general purposes it is better to have the patient look over the operator's shoulder at some distant object. I accomplish this purpose by having curtains at the door of my dark room, through which, when slightly opened the patient looks at a

wall four meters distant. This method secures relaxation of the subject's accommodation.

In regard to the order in which the tests should be taken up, I consider it advisable to go from the coarser to the finer tests, as the former give valuable hints as to the finer measurements to be expected from the latter; taking up the examination in the following order:

Visual acuteness and astigmatic lines, keratometry, direct ophthalmoscopy, skiascopy, the subjective methods and then skiascopy again for corroboration of the whole test. Naturally, as in any other skilled work, much depends upon the observer, but even to those who either by reason of physical disability or mental hebetude have not been able to acquire sufficient skill for the finest work, these objective tests prove of material benefit.

Dr. Lewis H. Taylor, Wilkes-Barre, Pa.—In regard to the use of the ophthalmometer, I can say that I have recently come to regard it as a most useful aid to the rapid determination of astigmatism. A few years ago in a discussion of this subject we heard the ophthalmometer referred to as an instrument that might be regarded as an interesting toy, and which would soon be relegated to the lumber room as something too useless to occupy the busy oculist's valuable time. Now, Mr. Chairman, I do not so regard it, but I find it daily of more and more value. We mistake greatly if we regard it as an accurate determiner, if I may use the word, of the exact refraction; it is only an aid, but a most valuable aid. I formerly regarded the subjective test with atropia, as the only method worthy of serious consideration, but now I am free to say that I use atropia far less than formerly. Ophthalmometry will not entirely take the place of subjective tests, nor will any other method, but I have frequently had patients return who had been wearing glasses with reasonable comfort for whom I could get a much more satisfactory correction than by the old method. The difficulty too often lies in the fact that some one devotes exclusive attention to one method, and claims too much for it, another tries it superficially and does not get such good results; he denounces the method and discards it. Both are in error; the middle ground here as elsewhere is the safest.

Dr. A. J. Erwin, Mansfield, Ohio—I do not believe it important what instrument, or which of the methods in use be employed in working refraction, so that we are only expert in our method, and expertness is necessary in any method in order to have good work. In regard to the varying of the degree of astigmatism, in any case it is doubtless due to the power of the accommodation at the time of the examination.

Dr. Jackson, in closing the discussion, said:—Dr. Randall, in using skiascopy to obtain his extremely accurate results at greater distance than I have advised, worked with the undilated pupil, thus excluding the extra-visual zone. Yet even then he did not find it necessary to make the theoretical allowance for distance. Now it is a fact that in the majority of cases the refraction of the extra-visual zone shows higher hyperopia or lower myopia than the visual zone, so that for this extra-visual zone such an allowance is out of place. Evidently under these conditions, the results have been appreciably affected by the refraction of this extra-visual zone.

In regard to the illumination of the ophthalmometer, it should be remembered that we are studying the reflection from a transparent membrane, and that its distinctness will depend both on the illumination of the reflected object and on the absence of light transmitted from behind the cornea, and for this reason it is almost as important to keep the eye shaded so as to illuminate the disc and mires.

In reply to the question as to the percentage of cases in which the ophthalmometer can be relied on for the prescription of lenses, I have recently, in 500 eyes, found that the corneal corresponded exactly with the total astigmatism in only 6 per cent. In about 20 per cent. the amount was almost exactly the same; in 60 per cent. the difference was not over 0.5 D.; in 52 per cent. the direction of the meridian corresponded exactly, and in 80 per cent. within fifteen degrees.

As to variations in astigmatism from time to time, it must be recognized that these do occur. They might be expected in progressive myopia, but they occur with hyperopic astigmatism as well. My attention was first called to this in my

own case where the astigmatism has increased from 0.50 D. to 1.75 D., and some years ago I published seventeen cases that I had been able to follow from year to year, with determination under mydriatics.

ARE LOW DEGREE LENSES "MERELY OF MYTHICAL VALUE?"

BY HORACE M. STARKEY, M.D.
CHICAGO.

The leading editorial of the JOURNAL OF THE AMERICAN MEDICAL ASSOCIATION, of Feb. 3, 1894, entitled, "Superfluous Spectacles" has attracted much attention and elicited considerable discussion and criticism. Most critics have, so far as observed by the writer, agreed that the editorial is, in the main, timely and excellent. The object of the editor was to enter a protest against what seems to him to be a growing tendency on the part of many ophthalmologists to find in the eyes a cause for all the ills to which flesh is heir, and also to fear that ills will come to the most vigorous if any error of refraction is allowed to go uncorrected. As a protest against the prescribing of spectacles without a clear indication for their use, and against considering the eye apart from the organism as a whole, we believe it is strong and timely.

The editor, however, not only protested against the prescription of lenses without clear indications for their use, but he also stated that certain lenses, namely spheres of less than 0.75 D. and cylinders of less than 0.50 D. were never indicated because they are valueless and so should never be prescribed. All of these low degree spheres and cylinders are to him "superfluous spectacles." In this your essayist believes he is mistaken, and to bring out the reasons for this belief as clearly and forcibly as possible is the object of this paper. As the editorial in question may not be familiar to all present, some

quotations will be made from it, followed by extracts from a letter by the writer, commenting on this editorial, published in the same JOURNAL two weeks later:

QUOTATION FROM EDITORIAL.

"Of all facts in medicine, none are the better founded than the knowledge that even moderate degrees of far-sightedness or astigmatism lead in many persons to discomfort in the use of the eyes and often to headaches and other nervous disturbances. The basis for the rational prescription of convex glasses and cylinders is hence as positive as the results are gratifying.

"But does every optic defect need correction and is every case of painful vision curable by glasses?

"No ophthalmologist can overlook the fact that many persons can tolerate moderate optic defects and some even high degrees of ametropia without ever suffering therefrom. . . .

"On inquiring into the general health of patients complaining of eye-strain and its consequences, it becomes apparent that the amount of optic imperfection which can be tolerated without distressing sensations depends on the vigor of the system at large, and especially the condition of the nervous system. It is not rare that patients call for correction of moderate far-sightedness or astigmatism, accept the glasses with satisfaction for the time, but lay them aside as unnecessary after some improvement of their general condition.

"Since errors of refraction are stationary conditions, (except progressive myopia which is foreign to this topic) there is hence no object in correcting them, unless they cause some annoyance, be it by poor sight or in the form of discomfort or headache or distress of any kind. If, however, any discomfort referable to the eyes is present, what is the lowest amount of ametropia which can be considered as the cause of the eye-strain?

"It is the general experience that a hypermetropia

of 0.75 D., or any degree of hypermetropia uncorrected to the extent of 0.75 D. can cause distress in many persons. But that a hypermetropic eye can appreciate a correction of half a dioptry or less will not be admitted by most observers. There is more diversity of opinion as to the amount of astigmatism which may require correction. While again 0.75 D. represents the lowest cylindrical lens which is ordinarily of benefit, cases do occur beyond doubt in which half a dioptry of astigmatism leads to discomfort or headaches.

"Such cases, however, are exceptional and occur as a rule only when the general health is below par. It is true that a cylinder of 0.25 D. is not only employed but even highly recommended by a few prominent oculists, but they have as yet furnished no proof that such lenses benefit their patients. The majority of oculists have learned from their own experience, as well as from the failures of the champions of the 0.25 D. cylinder, that such weak glasses are merely of mythical value."

QUOTATION FROM LETTER.

"The editorial in the JOURNAL of February 3, under the above title, 'Superfluous Spectacles' is on the whole excellent. There are some points, however, which, it seems to me are open to criticism. You seem to argue, though that is not very clear, that if a patient when out of health has glasses prescribed which he wears with relief and comfort until the general health improves and then voluntarily relinquishes them, that the glasses were of no service. As well might you argue that the tonic of restorative medicine taken when out of health was of no benefit because not needed when the health is restored. I believe it is a very common practice with oculists (it certainly is with me) to prescribe lenses with the distinct expectation that they can be taken off when the general health and the eye health improves. The rest given to the eyes by the glasses assists the eyes

to so recuperate that they may be used comfortably without glasses; and the relief given thereby to the nervous and muscular systems, is, I am sure, a potent factor in the general restoration of health. It is not at all uncommon to find young persons suffering from almost constant headache from eye-strain, and in whom the headache is relieved at once and entirely by proper lenses, after a time gradually leaving off those lenses without a return of the headache. Does that prove that the glasses were of no use? Does it not rather prove that the eyes have been so strengthened and improved by the glasses that they are now able to do their proper work without the fatigue and pain formerly experienced? In such cases, where there is a moderate degree of ametropia only, I invariably instruct my patients that the glasses are a means, not an end, and that it is to be hoped that they may later be able to discard them wholly or in part.

You ask: "Does every optic defect need correction?" Certainly not, nor do I think that any prominent ophthalmologist so teaches. It seems to me that the indications for lenses are and should be very distinctly kept in view. They are but two; the relief of discomfort in the use of the eyes and the improvement of vision. If there is no discomfort from the use of the eyes but vision is improved by lenses the patient may, I think, elect whether he will wear glasses or not. If the bother of wearing glasses is greater than the pleasure of improved sight he may with propriety refuse them. (Except in progressive myopia which is foreign to this topic.) If, on the other hand, there is discomfort from the use of the eyes which can be relieved more easily by the use of the lenses than by any other means, whether the required lens be of high or low power, such lenses should be prescribed and worn so long as, and no longer than they are beneficial. And this leads to the consideration of what it seems to me is a most important misconception in your editorial, when you

comment on the use of low degree spherical and cylindrical lenses. You argue that the eye can not appreciate a less degree than 0.75 D. sphere and a less degree than an 0.50 D. cylinder. If this were so it would very much simplify our trial cases of test lenses. It is illogical to say that the eye can not appreciate less than 0.75 D. S. below 0.75 D., and yet can appreciate a shorter interval above that; or that the eye can not appreciate less than 0.50 D. C. below 0.50 D., and can appreciate less than that above. So that if your statement is correct our trial cases instead of having, as usually now, twelve pairs each of spherical and cylindrical lenses up to 3.00 D. need have but four pairs of spheres, viz: 0.75 D., 1.50 D., 2.25 D., and 3.00 D., and six pairs of cylinders, viz: 0.50 D., 1.00 D., 1.50 D., 2.00 D., 2.50 D., and 3.00 D. The fact is, however, that many eyes can appreciate a difference of one-fourth of a dioptre and even one-eighth of a dioptre in weak spheres or cylinders. But the ability of the eye to appreciate such small differences is not proof that such differences are of practical importance; that must be determined by clinical experience. In regard to that you say: "The majority of oculists have learned from their own experience, as well as from the failures of the champions of the 0.50 D. cylinder, that such weak glasses are merely of mythical value." I think you are mistaken in that statement. So far as I have been able to learn and observe, the oculists who believe that such weak glasses are of merely mythical value have not used them. They do not believe that such lenses can have any value, and so have never tried them.

Again you say: "It is true that a cylinder of 0.25 D. is not only employed but even highly recommended by a few prominent oculists, but they have as yet furnished no proof that such lenses benefit their patients." Now that statement surprises me very much, for I thought a great deal of proof of such benefit had been furnished. If it has not been presented it should, if available, be before the pro-

fession, and I will endeavor to furnish the proof to establish the fact, if it is a fact, that the 0.25 D. cylinder is a most valuable therapeutic agent."

"The majority of oculists have learned from their own experience, as well as from the failures of the champions of the 0.25 D. cylinders that such weak glasses are merely of mythical value."

In this one sentence of the editorial are three disputed points which we will now consider: 1, is the 0.25 D. cylinder of merely mythical value? 2, do the majority of oculists so regard it? 3, have a majority of oculists learned this from their own experience? In all of these points the writer believes the editor mistaken, but desires to view the subject from a calm scientific standpoint and if he himself is the one in error will still welcome the truth. The last two of these questions are comparatively easily determinable by simple inquiry; while the first may be investigated from three standpoints: 1, that of personal experience and observation; 2, the teachings of the textbooks; and 3, the personal experience and observation of other workers in this special field.

To assist in answering these questions the writer sent the following letter to one hundred ophthalmologists scattered throughout the land:

"*Dear Doctor:*—There appears to be much difference of opinion among ophthalmologists as to the value of low degree lenses. To assist in solving the problem will you kindly answer the following questions:

"1. Do you ever prescribe cylinders of less than 0.50 D.? or spheres of less than 0.75 D.?

"2. If no. Have you ever prescribed such lenses and if so what are the reasons for discontinuing them?

"3. If yes. In what cases do you prescribe them and what evidence have you of their value?"

Of the 100 so addressed, 75, located in 26 States replied. It would seem as if these replies must give some indication of the practice of ophthalmologists in general in this country. Most of those addressed were unknown to the writer except by reputation, and of very few of them was the practice in regard

to low degree lenses known. Under these circumstances it is hardly to be supposed that a great majority of them should have been taken from a minority of oculists. The replies received are surprising, in that they indicate that a very large proportion of oculists employ both weak cylinders and weak sphericals; a few only, prescribe one but not both, and yet fewer prescribe neither. Thus we find that of the seventy-five, sixty-six replied, Yes; they do use the 0.25 D. C. and the 0.50 D. S.; four reply, Yes, but seldom; three use the spheres but not the cylinders, and but two answer no, and one of those the writer of the editorial in question. Seventy do prescribe the 0.25 D. cylinders and five do not, and of the five, three prescribe the 0.50 D. sphericals.

In answer to the second question there are replies from four; two who say that they do not now use these weak cylinders because they have no evidence of their value, but do not state if they have ever used them; one who says he has quit because he is convinced that they are useless; and one who says he rarely uses them now, because he finds that atropia either shows at least 0.50 D. of astigmatism present or none at all.

The answers to the third question are fairly uniform, most of the answers being, in general terms, That the low degree lenses are prescribed in cases where persistent asthenopic or reflex symptoms are associated with slight errors of refraction, and the evidence of their value is the disappearance of these symptoms when the proper lenses are adjusted. A number of replies state that in many cases the symptoms remain absent so long as the lenses are worn and return at once when the lenses are omitted. I have tabulated these seventy-five replies, all that were received.

Oculist.	Replies to Question 1.	Replies to Questions 2 and 3.
Allen, H.P.	Yes; 0.25 D. C. constantly; 0.50 D. S. also.	Relief of asthenopia and headaches.
Allport, Frank.	Yes; skeptical as to S. Positive of value of 0.25 D. C.	Relief of headaches, asthenopia, etc., in H. as obtain results difficult or impossible without their use.
Ayers, S.C.	Yes; 0.25 D. C. frequently; 0.25 or 0.50 D. S. often, especially in school children, frequently combined.	Improvement of vision and addition to comfort of patient.
Aschman, G. A.	Yes; but not till other means of relief have failed.	In cases of asthenopia after other means as rest, tonics, etc., have failed. Usually young teachers, students, etc., using eyes much. Evidence of value relief from asthenopia.
Baker, A.R.	Yes; very many such cases.	In all cases where there is headache or other evidence of asthenopia, particularly cylinders where axes are irregular. Most happy results in relief of symptoms. Low degree of ametropia cause more severe symptoms than high degree.
Blitz, Adolph.	Yes; cylinders 0.25 D and 0.37 D., sometimes 0.25 D. S.	Eye-strain with headaches, irritation of eyes, etc. Relief of these symptoms.
Bryant, D. C.	Yes.	Where there are symptoms of asthenopia, I correct errors of high or low degree.
Buckner, Jas. H.	Yes; rarely. 0.25 C. alone, frequently combined with 0.25 0.50 S.	Complete relief of such symptoms. Asthenopia. Relief of symptoms.
Carrow, F.	Yes; 0.25 C. and 0.50 S. and compounds of these.	Cases of asthenopia among the 4,000 students under my observation. Relief of asthenopia. Have exceptional opportunity to observe cases for long periods in Michigan University, State Normal School, etc.
Carvelle, H. D. W.	Yes; very often.	Cases of headache and inability to use eyes without discomfort or where sight is materially improved. Relief of asthenopia and improvement of vision.
Cheatham, Wm.	Frequently, especially the cylinders.	To improve vision and relieve pain, blurring, headache, etc. Relief of these symptoms.
Chisolm, J. J.	Very decidedly, yes.	0.25 D. + — Most useful in list especially when astigmatism is oblique asthenopia. Change from inability to use eyes without headache to use all day without trouble and return of headache, etc., when lenses are left off.
Colburn, J. E.	Yes.	Asthenopia not otherwise relieved and reflex irritation not otherwise explained, in which low degrees of error exist. Cessation of symptoms so promptly follows that no other cause of relief can be assigned, other means having failed.

Oculist.	Replies to Question 1.	Replies to Questions 2 and 3.
Cotter, Robt. O.	Yes; certainly and frequently.	Almost altogether in cases of H. and H a. Comfort to patient arising from their use best evidence of value.
Coleman, W. F.	Cys. very constantly, 0.50 S. occasionally.	When they improve vision or relieve asthenopia. Simple 0.25 D. C.'s give remarkable relief in a few cases.
Connor, Leartus.	Yes; for more than twenty years.	Same class cases as require stronger lenses and relief of the same. Same relief from eyeache, headache, weariness, photophobia and other evidences of exhaustion as with stronger lenses when they are needed. Relief constant and permanent.
Chase, John.	Yes; cys. frequently for ten years with satisfactory results. S. less often.	In cases of eye-strain where ametropia shows no higher degree of error. Relief of unpleasant symptoms.
Dickinson, Frances.	Yes; particularly cys. in oblique astigmatism.	In cases of asthenopia the weak lenses when they correct the error give the same relief that stronger lenses give in cases for which they are suitable.
Dunlavy, J. C.	Yes; often, because eyes demand them.	A large number of cases of asthenopia fully relieved by their use.
Fox, L. Webster.	Yes; both S. and C. daily.	Asthenopia and headaches. I consider these glasses most valuable.
Frothingham, G. E.	Yes.	In cases of asthenopia showing this amount of error under a mydriatic and am satisfied with the relief in a majority of cases. Formerly ignored these low degrees but soon became convinced this was an error.
Gardiner, E. J.	Yes; C. frequently; S. seldom.	It has been my experience that quite a number of asthenopic symptoms are caused by astigmatism of less than 0.50 D. and proper correction has relieved the difficulty, hence I prescribe them.
Gould, Geo. M.	Most certainly, yes.	Would not cure or keep my patients if I did not do so. Anisometropia, unsymmetric astigmatism and even in isometropia and symmetric astigmatism where relief of symptoms or occupation demands.
Hawley, Clark W.	Yes; more than of higher degrees.	Asthenopia and some reflex troubles that can not otherwise be explained. Relief of symptoms.
Hobby, C. M.	Yes.	Where vision is improved or asthenopia relieved. Asthenopia from ametropia is caused by the effort put forth to secure a sharp image, not upon amount of ametropia. I correct any amount of ametropia which diminishes visual acuteness or leads to fatigue.
Holmes, E. L.	Yes.	I prescribe them whenever on trial they render use of eyes at close work more comfortable.

OCULIST.	REPLIES TO QUESTION 1.	REPLIES TO QUESTIONS 2 AND 3.
Hotz, F. C.	Yes.	In the same cases and on the same principles where with higher degrees of error stronger lenses would be given and with the same results.
Jackson, Edward.	Yes; but not often except in combination.	Persistent asthenopia, aggravated by eye work without other discoverable cause. Freedom from the previous pain, discomfort, congestion, irritation, etc., increased ability for eye-work and recurrence of symptoms on leaving off glasses.
Keyser, Peter D.	Yes; frequently.	In all cases where necessary to relieve strain, I have for twenty-five years found them very serviceable and satisfactory.
Knapp, Herman S.	Cys. exceptionally, Sph. frequently.	Cylinders in one eye, if either has marked ametropia. Spheres not infrequently in young people of nervous temperament.
Kollock, Chas. W.	Yes.	Not very frequently and only in cases where on trial decided relief to asthenopia or decided improvement in vision is obtained.
Maire, L.E.	Yes.	Asthenopia due to slight errors. In a comparatively large proportion of cases, relief is obtained by their use.
Mann, Wm. A.	Yes.	Cases (mainly stenographers, bookkeepers, teachers, sewing girls, etc.) with slight refraction errors with symptoms of eye-strain which are relieved by careful adjustment of lenses tried for several days. Relief of symptoms of eye strain.
Miller, R. W.	Yes; cylinders often, S. occasionally.	In cases of accommodative asthenopia. mostly in young people, marked relief is obtained by such lenses.
Minney, J. E.	Yes.	Students and sewing girls. They give relief.
Mittendorf, B. L.	Yes; frequently, especially cylinders.	In all forms of asthenopia, especially ocular headaches which are, as a rule, relieved by these glasses.
Montgomery, W. T.	Yes; cylinders frequently, S. exceptionally.	Cases with frontal headaches and generally irritable condition of the eyes. Complete relief and ability to use the eyes comfortably.
Moulton, H.	Yes; cylinders frequently, S. occasionally.	The cylinders in cases of oblique astigmatism with asthenopia or headache in most cases give relief to the patient.
Murrell, Thos. E.	Yes; habitually and daily.	Correct all cases of astigmatism to 0.25 D. Give 0.50 D. or less S. as partial correction of higher degree of hyperopia. Relief from symptoms.
Oliver, Chas. A.	Yes, for thirteen years.	Asthenopia and other troublesome eye symptoms not relieved by other means. Relief of these symptoms.

Oculist.	Replies to Question 1.	Replies to Questions 2 and 3.
Pinkard, Chas. P.	Yes.	Asthenopia. Relief of symptoms.
Price, G.H.	Yes; rather frequently. Nearly 50 per cent. of refraction cases receive one or other alone or in combination.	All cases of low degrees of astigmatism are corrected. Relief of distress in use of eyes.
Prince, A. F.	Yes; in 100 consecutive cases (200 eyes) 36 eyes received C. less than 0.50 D. and 50 received S. less than 0.75 D.	Cases with low refraction error with asthenopia, ocular headache or neurasthenia, not otherwise accounted for. Testimony of patient as to relief by use of glasses and the return of symptoms when glasses are discontinued.
Randolph, R. E.	Yes; 0.25, 0.50 D. cylinders more frequently than any others. S. less frequently.	In all cases where astigmatism of 0.50 or less is present.
Randall, B. A.	Yes; 0.37 or 0.25 cys. not infrequently. Sphericals occasionally.	Patients having low errors with asthenopia not relieved by tonics, hygienic and other means; retinal and choroidal disturbance, etc., call for correction of those errors. Relief of distress, increased capacity for eye work and disappearance of fundus symptoms.
Richey, S. O.	Yes.	Always correct the static refraction fully, but do not often find these low degrees, not due to spasm.
Risley, S. D.	Yes; frequently.	Anisometropie, antimetropia and asthenopia, especially in neurotic individuals. Much clinical evidence.
Ray, J. M.	Yes; where symptoms demand. Never simply because that amount of error exists.	Eye-pain, etc., give proper glasses whether of low or high degree. Relief of the trouble complained of.
Savage, G. C.	Yes.	Correct all astigmatism from highest to lowest degree in all cases.
Schneider, Jos.	Yes; very often.	Cases with small error and large nervous manifestations. Relief of very distressing symptoms.
de Schweinitz, G. E.	Yes.	In all cases in which low degrees of astigmatism are the evident cause of asthenopia in the widest acceptation of the term; because an abundant experience demonstrates that relief follows such practice.
Scott, X. C.	Cys. yes. Sph. except in combination, no.	Cases with asthenopic symptoms and conditions. Cases who could do no work with their eyes without headache which have been entirely relieved.
Smith, F.T.	Yes	Use them empirically where they seem to relieve asthenopia. In a few cases relief has been complete; in most the glasses were rejected after a few days.

Oculist.	Replies to Question 1.	Replies to Questions 2 and 3.
Standish, Myles.	Yes.	In all cases in which the asthenopia or nervous symptoms, headache, etc., are prominent. The evidence of my own eyes, in which 0.25 D. makes the difference between comfort and great discomfort.
Stevens, Geo. T.	Yes; but cys. rarely, now 0.50 D. S. frequently.	Rarely now prescribe 0.25 D. except combination with higher power. Usually 0.25 of astigmatism does not cause annoyance unless associated with muscular trouble and the correction of the latter is usually sufficient relief.
Thompson, J. L.	Yes; most decidedly for past twenty-three years.	Evidence of value accumulates year by year. In hypermetropia, in simple astigmatism, and in compound hyperopic astigmatism. The evidence of patients is such in hundreds of cases that I am as fully convinced of the remedial power of these lenses as I am that the earth revolves upon its axis.
Thompson, R. L.	Yes; 0.25 C. frequently. 0.50 S. occasionally.	Never simply to correct an error of refraction but to improve vision, to relieve eye-strain, blepharitis, marginalis, burning and blurring after use of eyes, headaches, pain in eyes, etc. Relief to patients from the symptoms mentioned.
Tiffany, F. H.	Yes; both frequently.	In heterophoria I find them of value; they relieve asthenopia and assist in restoring balance and strength of the extrinsic ocular muscles.
Turnbull, C. S.	Yes; with much pleasure and satisfaction.	Usually in cases of Ha., H., and a H., seldom in Ma and Ma M.
Vermyne, J. J.	Yes; cys. not very frequently.	Cases of constant headache and pain in eyes, etc., that have been treated by other means without relief, and other symptoms of irritation about eyes. As relief of these symptoms through rest of eyes and general treatment is always insisted upon, amount of benefit from lenses is difficult to determine.
Wescott, Cassius.	Yes.	I correct all cases with measurable error if there are symptoms of eye-strain. Disappearance of headaches and other troubles under use of 0.25 to reappear when attempt is made to lay them aside.
Wood, Casey A.	Yes.	Most cases of astigmatism against the rule. Nervous symptoms, as asthenopia and weakness of accommodation, headache, blepharitis, general relief from symptoms.
Würdemann, H. V.	Yes; constantly as to cys.; rarely as to S. except in combination.	Correct low degrees under same circumstances as I would correct higher degrees and with equally good results. Relief of asthenopia and occasionally of reflex disturbances as chorea.

Oculist.	Replies to Question 1.	Replies to Questions 2 and 3.
Wilder, Wm. H.	Yes; both.	In persons with low degree of error who use their eyes much at close range presenting symptoms of asthenopia; as smarting pain in head and eye-balls, blepharitis, general debility, etc. Relief from symptoms.
Bettman, B.	Yes; but seldom C. and S. very seldom.	Relief of asthenopia when present. Never given simply because slight error is found. The prescribing of spectacles has been much overdone.
Fiske, Geo. F.	Yes; very seldom.	In rare cases of anisometropia, often where from ill-health use of eyes is difficult except under most favorable conditions. Evidence of value cessation of headaches and ability to use eyes comfortably.
Ware, Lyman.	Yes, but very rarely.	Eye-strain, recovery or restoration of normal condition.
Young, H. B.	Seldom now.	Under atropin I usually find more error or none at all. In anisometropia of low degree I prescribe crossed cylinders. Occasionally in neurasthenics who have much eye-work to do I prescribe 0.50 S. I believe they usually have really no value, the burden of the glasses being greater than the burden of the error.
Dowling, F.	Cys., no; S. rarely.	I do not think such a low degree of astigmatism needs correcting.
Erwin, A. J.	Cys., no; S. sometimes where accurate vision is required.	I have quit prescribing cylinders of less than 0.50 D., as I am convinced that as a rule a low degree astigmatism is less hurtful than the corresponding cylinders.
Sinclair, J. G.	Cys., no; spheres, yes.	In low degrees of H. and weakness of muscle of accommodation.
Gibson, Robt. D.	No.	With rare exceptions I obtain as good results with plano lenses as with these. (Try it).
Gradle, Henry.	Very rarely, if ever, now.	No evidence that they are of any value.

So far as can be judged by these replies the editor is mistaken in questions two and three. We will now consider the first question. Is the 0.25 D. cylinder of merely mythical value, on the lines suggested? 1, personal experience; 2, the teachings of recent American text-books; and 3, the experience and observation of others.

1. Personal experience and observation. The writer has for many years prescribed the low degree

cylinders rather frequently; the low degree spheres rather infrequently. In the earlier years he believed, as he had been taught, that less than one dioptre of astigmatism was not worth considering. He, however, found cases requiring correction for less degrees, and gradually made more accurate correction until the 0.25 D. cylinder was reached. Then certain cases were found not entirely corrected by 0.25 D. C. and a little over corrected by 0.50 D. C. and so in 1890, 0.37 D. C. was added to the trial lenses and a little later in the same year 0.12 D. C., 0.62 D. C., and 0.88 D. C. An 0.12 D. lens has been prescribed a very few times, in cases requiring a higher correction for the other eye; 0.37 D. is used frequently; 0.62 not so frequently and 0.88 rarely. Cases are constantly seen where a difference of one-eighth dioptre in the strength of the correcting lens causes a decided difference both in the acuteness of vision and in the comfort of the wearer. This has been illustrated several times when a patient for whom 0.37 D. C. lenses has been prescribed returned with the statement that they did not seem right, and upon examination it was found that the optician had substituted 0.25 D. or 0.50 D. When the patient procured the proper glass the trouble disappeared. Those most frequently requiring these weak lenses are schoolboys and girls about the age of puberty, medical and other students, stenographers, bookkeepers and typewriters, sewing girls and finally the neurasthenic and debilitated. Many of these require constitutional and other treatment, and most of them would recover completely with this and prolonged and complete rest for the eyes. But to many of them this rest is simply impossible, and anything which will assist them to bear their necessary load is eagerly accepted.

The lenses are fitted and prescribed with the utmost care. The general condition of the patient is noted, other sources of irritation are sought, and patients are encouraged to take rest, recreation and whatever general remedies may be indicated and to avoid the

wearing of glasses unless really necessary. The refraction is carefully worked out and the lens theoretically required noted. But the crucial test is the actual wearing of the lenses. The patient is given lenses such as seem to be required, to wear about his regular work for one, two, three or more days, that he may determine with certainty the effect. This is easily done by having a number of pairs of frames with round cells and a number of cylinders of various numbers cut round so as to fit in these cells. The axis of the cylinder can thus be placed at any desired angle. Where doubt exists as to the value of the lens on trial, window glass so marked that the patient shall not know the difference is substituted and the patient tries that. Rarely one is found who accepts the latter as well as the lens, and he is advised to postpone wearing glasses and try other measures. A number of patients who have been wearing lenses a considerable time have, in the past few months, had their lenses replaced by window glass to see if they liked the one as well as the other. In none of these cases has the window glass given satisfaction.

A few illustrative cases will be given among those furnished by others. Very many equally striking could be added. Nearly all the patients whose cases are given, live in Chicago, have been frequently seen since the glasses were prescribed and have received the advice to try leaving them off but have been unable to do so.

2. The teachings of some of the more recent American and English text-books will be considered, the list not being complete as only the writer's library was consulted.

It is surprising to see how little is said upon this particular point in these text-books; even men who are well known, from papers read before this Section, to have very decided views on the subject, discussing it in a very indefinite and unsatisfactory manner.

Juler, "A Hand-book of Ophthalmic Science and Practice," 1893. Nothing about low degree lenses.

Roosa, "Schmidt-Rimple, 1889." Notes the necessity of correcting even low degree of astigmatism in presbyopia.

Nettleship, "Diseases of the Eye," 1890. Has only the most general statements concerning the relation of hypermetropia to asthenopia. Nothing as to the correction of low degrees of ametropia.

Tiffany, "Anomalies of Refraction and of the Muscles of the Eyes," 1894. Seems to advise the use of both weak spheres and cylinders in certain cases, but the teaching is not very clear or definite.

Fuchs, "Text-book of Ophthalmology, American Translation," 1892. "The treatment of astigmatism consists in correcting it as precisely as possible by means of cylindrical glasses. In this way distinct vision can be secured and at the same time the asthenopia is relieved." This comprises all he has to say on the subject.

Berry, "Diseases of the Eye," 1893. Speaks of astigmatism of one-fifth or less as a cause of headache in certain cases, and of the necessity of correcting even low degrees of ametropia in such cases.

Noyes, "Diseases of the Eye," Second Edition, 1894, says: "The more pronounced are the asthenopic symptoms the more searching must be the search for astigmatism and the more accurate its correction. Then even slight degrees, 0.5 D. must not be neglected," p. 127. "But it must be emphasized that in susceptible persons small errors, especially hyperopic astigmatism calling for a cylinder with axis nearly vertical or even small degrees of hyperopia demand exact correction. As a fact, we have often to deal with a susceptible organism, and because it is easily set ajar we must remove even minute sources of disquietude." Pp. 197–198.

Norris and Oliver, "Text-book of Ophthalmology," 1893, are most decided and definite in their statements of the relation between slight ametropia and asthenopia and state that the correction of even 0.25 D. of astigmatism is often followed by marked relief

of asthenopia and increase in visual power. Pp. 266 and 211.

De Schweinitz, "Diseases of the Eye," 1892. Advises in a general way the use of low degree S. and C. lenses but is not very definite.

The experience and observation of others. To obtain this the author wrote to fifty of those who had replied to the previous letter, asking that each one send notes of two cases for whom these low degree lenses had been prescribed, and that these be cases sufficiently long under observation to show results. Of these thirty-nine replied, most of them sending two or more suitable cases, some sending one and a very few sending cases that can not be used in this paper because not coming within the low degree lenses asked. To all of those, answering either of these letters, the writer wishes to extend most hearty thanks. Many have taken much time and trouble to look up cases and records. That work is appreciated and the author hopes the results will justify the labor. Fifty cases are given below, one only being taken from each contributor in most cases, and sufficient taken from the author's records to make the number an even fifty. While most of the cases are necessarily condensed to bring them in the limit of this paper, an effort has been made in each report to give the exact idea of the reporter and in as nearly his own language as possible. Many of those sending cases wrote that they could easily duplicate those cases by hundreds.

Case 1.—Reported by Dr. H. P. Allen. Miss P. R., age 19; student. General health good, November, 1888. Asthenopia; blurring after using eyes for an hour particularly at night; temporal headaches, not severe. Other members of family have similar eye troubles. V. 20-18 P. P. 3 inches. Correction R. 0.25 C. 30°. L. 0.25 C. 180°. Reported April, 1892, that she had entire relief. "Did not know that glasses could do so much for her."

Case 2.—Mrs. L. N., age 30. Perfectly healthy. September 1891. Reads several hours daily. Severe frontal pain sometimes with occipital pain and nausea after reading half an hour; has been using + 0.50 S. without much relief. Orthophoria V. 20-18. Correction + 0.25 C. 90° both. Re-

lief almost immediate. Axes changed to 180° and without patient's knowledge return of all trouble. Reported 1893: "I always use my glasses for near work. Never have any trouble now."

Case 3.—Reported by Dr. Frank Allport. Miss M. F., age 20. Healthy. Asthenopia, severe and protracted headaches. Competent oculists have fitted various convex spheres. No result. Tenotomy had been advised but declined. I find esophoria 4°. Homatropia correction + 1.25 S. ⌒ + 0.25 C. 90° each eye. Prescribed 0.25 C. 90° each eye for constant use. Patient perfectly well for one year and still wears glasses.

Case 4.—Dr. Frank Allport. G. G., boy. Age 14; good health. Headache in school, almost incessant winking and blinking, blepharitis. Homatropia correction. + 1.50 S. ⌒ + 0.50 C. 90° each eye. Lids treated and boy taken from school for a few weeks. Prescribed 0.25 C. 90° each eye for constant use. Has worn these for two years. Perfect result.

Case 5.—Reported by Dr. G. A. Aschman. N. P., 18. Seamstress. Eyes tire after sewing and smart and burn at night. Headache, twitching of lids, watering of eyes and blurring. Tonics and rest improve condition, but still considerable trouble. Correction + 0.25 D. C. 135° and 45°. Relief immediate and one and one-half years later she still wears glasses constantly for work with complete relief. Broke one lens a few months ago and while having it repaired old symptoms returned, to disappear when lenses were resumed.

Case 6.—Reported by Dr. A. R. Baker. G. E. P., farmer's daughter, age 28. Comes to renew glasses broken for six months. Constant sufferer from headache from childhood till six years ago. She at that time received from me correction + 0.25 D. C. 60° and 120° increasing V. from 20 30 to 20-20 and entirely relieving head. Since glasses were broken, headaches have returned; patient hoped to get along without glasses but could not. Renewal of lenses stopped the headaches.

Case 7.—Reported by Dr. B. Bettman. Dr. E., age 40; busy over-worked practitioner. Tired feeling and frontal headache increasing toward night. Refraction under cycloplegia 1. D.; after recovery accepts 0.50 D. S. These gave immediate and complete relief. Later after vacation and rest he finds them unnecessary and lays them aside.

Case 8.—Reported by Dr. J. H. Buckner. Miss M. H., seamstress. April, 1893. Much headache for two years. V. each eye 20-15. Correction under atropia. R. + 0.25 S. ⌒ + 0.25 C. 135°. L. + 0.25 S. ⌒ + 0.25 C. 45°. Ordered these. Entire relief from headache.

Case 9.—Reported by Dr. H. D. W. Carvelle. Fred N., age 21. Druggist clerk. July, 1888. Left eye enucleated in 1886; R. eye weak; can not read or write without headache and

pain in eye so that he was obliged to give up his position. Correction with homatropia + 0.25 S. ⌒ + 0.25 C. 90° with which pain and headache disappeared and work was resumed.

Case 10.—Reported by Dr. Wm. Cheatham. Emma N., age 24. Health good. Nov. 12, 1892. Spots before eyes; discomfort in back of head when eyes are used. Mild conjunctivitis and blepharitis. Treatment for latter ineffectual. Atropia correction. R. + 0.25 D. C. 90°. L. + 0.25 D. C. 75°. Have worn these with perfect satisfaction since. Quickly recovered from the conjunctivitis and blepharitis. Reported a few days ago.

Case 11.—Reported by Dr. J. J. Chisolm. Mr. La C., age 30. May, 1891. Eye and head pains and photophobia. Can not use eyes without pain V. 20-20 and 1-1. Correction = 0.25 D. C. 180° each. These gave complete relief and have been worn since with comfort, but can not be left off for a single day without return of pain.

Case 12.—Reported by Dr. J. E. Colburn. Bertha W., 25. Health good. Frontal and occipital headaches. Blepharitis. Correction. R. + 0.37. 90°. L. + 0.25. 90°. These were prescribed but patient complained of pain in right eye; this lens was found to be 0.25 instead of 0.37. Pretended to change this but patient still complained. Changed to 0.37. These gave complete relief and she is still wearing them without headaches.

Case 13.—Dr. Coleman. Annie S., age 17. High school student. Any study in evening causes eyes to pain. Homatropia correction + 0.25 D. C. 90° each. Seen several times since; says she has absolutely no trouble with eyes if glasses are worn but pains soon return if glasses are taken off.

Case 14.—Reported by Dr. Robt. O. Cotter. Mrs. C. V. W., age 53. Pain in eyes and head on any attempt to use eyes for distance, or for near points with presbyopic lenses. Correction + 0.25 D. C. 90° each eye. These for distance with proper correction added for close work gave complete relief from the above symptoms and have been worn with comfort for four years.

Case 15.—Reported by Dr. J. C. Dunlavy. Miss G. Age 18. Teacher. August, 1891. Good health except almost constant headaches. Dizziness when headache is bad. Profound asthenopia. Correction + 0.25 D. C. 180° both. Within four weeks all pain and asthenopia had disappeared and eyes were used without difficulty. Glasses now used for close work only.

Case 16.—Reported by Dr. J. C. Dunlavy. Miss P. Age 19. College student. August, 1891. So much eye ache and headache she had left school. Correction + 0.25 D. C. 75° and 105°. In three weeks returned to school. Graduated

last year and is now taking post graduate course. No trouble with eyes in all this work.

Case 17.—Reported by Dr. Geo. M. Gould. Mr. A. D. E. Age 25. Consulted many oculists in past six years for intense headaches in eyes and temples and occiput; reading ten minutes would bring on an attack which usually lasted a day. All had given—spheres or cylinders; wearing now —0.25 C. 90°. Mydriatic correction + 0.62 S. ⊂ + 0.37 C. 180° each eye. Use of these lenses gave at once complete relief with ability to read a normal time. This happy condition has continued for six months.

Case 18.—Dr. Geo. M. Gould. Mrs. A. M. W. Age 22. Trained nurse. Been wearing for eight years + 0.62 D. S. Severe headaches, temporal and occipital, recurring of late years once or twice a week. The following correction has been worn over a year with relief of headaches. R. + 0.25 S. ⊂ 0.25 C. 90°. L. + 0.37 S. ⊂ + 0.25 C. 90°. Headache at once returns if glasses are discarded for the shortest time.

Case 19.—Reported by Dr. E. J. Gardiner. Miss P., age 30. May, 1889. From early childhood has been a martyr to most severe headaches, coming on sometimes twice a week and prostrating her for two days at a time. With the lighter attacks she could go about the house, but the "regular attacks" sent her to bed in a dark room. Use of eyes for close work frequently brought on these attacks. All kinds of treatment had been found unavailing. The eyes had been examined and found normal; the headaches had been finally accepted as a necessary evil. Examination of eyes revealed nothing abnormal. R. E., V. 20-20 C. 25 S. a little better. L. E., V. 20-20, 0.25 C. 90° better. Most careful testing under atropia did not change this, so above were prescribed. Headaches began to diminish at once in frequency and intensity, and in these three months patient reported that she had "no more headaches." Six months later when on a long journey glasses were broken and headaches soon commenced again; by the time she got home she had one of her old attacks. New glasses again gave relief; she has continued to use her glasses until last year (1893) and lately has been going without them without any return of the headaches.

Case 20.—Reported by Clark W. Hawley. Miss K. F., 11, school girl. Good health. Occipital and frontal headache from study. Letters get mixed up when reading. Correction + 0.25 D. C. 135° and 45° have given complete relief now one year. Glasses sometimes left off a few hours when old headaches return, at once relieved by resuming glasses.

Case 21.—Report by Dr. C. M. Hobby. Miss E. C., age 18. Asthenopia. V. 20-20 each eye. Under mydriatic R. + 0.25 D. C. 60° 20 = 20 +. L. + 0.25 D. C. 120° 20-20 +. With this correction vision remained comfortable permanently.

Case 22.—Reported by Dr. F. C. Hotz. Boy of 12. Constant frowning; eyes red and lids swelling after reading a short time. Ordered + 0.25 C. 180° each eye. Was relieved. Eyes so well, glasses were left off after a time but in a few days he was compelled to wear them again because the old symptoms had returned.

Case 23.—Dr. F. C. Hotz. Bookkeeper, age 20. After few hours' work eyes burn and smart, and dull headache often compels cessation of work in afternoon. Very sensitive to light; can not read in evening. Conjunctivitis treated four months; improved but other symptoms remain. Ordered + 0.25 D. C. 90° each eye and topical applications discontinued. Now after six months has been working over books every day without slightest discomfort.

Case 24.—Reported by Dr. Chas. W. Kollock. Female, age 29. V. normal. For two years use of eyes for close work causes blurring and lachrymation with pain. Atropia correction + 0.25 D. C. 90° each eye. These have been worn now for six years with relief from symptoms complained of.

Case 25.—Reported by Dr. Peter D. Keyser. Mrs. C. E. D., age 27. Can not read five minutes without lids drooping and a sandy feeling in eyes. Persistence in work canses headache and nausea. Atropia correction + 0.25 D. C. 60° and 90°. Has worn these glasses six weeks and is entirely relieved of her trouble.

Case 26.—Reported by Dr. L. E. Maire. Mrs. E. R., age 31. February, 1893. Nervous temperament. Periodical headaches not relieved by thorough constitutional treatment. Pain in head and eyes daily occurrence, interfering with her household duties. Fundus normal. Homatropia correction —0.25 D. S. each eye. These glasses give entire relief. Latter part of 1893, eyes were very comfortable. Glasses were omitted when headaches returned. Glasses resumed, relief again complete and has continued to this time.

Case 27.—Reported by Dr. Wm. A. Mann. Miss M. H., age 23. Stenographer. Had to quit work on account of "weak eyes." Head and eyes ache after using a short time; type blurs. Homatropia correction. R. + 0.25 C. 10°. L. + 0.25 C. 180°. Complete relief from asthenopia symptoms, and says after three months she can't get along without them.

Case 28.—Reported by Dr. J. E. Minney. Dr. C. E. N., age 21. December, 1893. Constant headache, with temporary blindness when headaches are most severe. Correction. + 0.25 D. C. 90° both eyes, gave relief which has continued now four months.

Case 29.—Reported by Dr. B. L. Mittendorf. Miss A. H., age 18. College student. January, 1894. Severe and almost constant headaches for years. Treated by family physician for a long time without relief. One year ago given + 1. D. S.; worn since without relief. Headaches so severe she thinks

she will have to give up study. Correction + 0.25 D. C. 180°. January 27, headache very much better. April 20, has lost glasses. Study for one day without glasses has caused return of headaches with great violence. Similar correction again given. No headaches since.

Case 30.—Reported by Dr. W. T. Montgomery. M. De W., age 11. School girl. General health good. Jan. 1, 1891. Smarting and aching of eyes, frontal headaches for four years. Headaches now so severe, she had to give up school. Vision 20-20 either eye. + 0.25 D. C. Axis 25° right eye, and 150° left eye. Vision 20-20. These glasses give complete relief so long as she wears them, with recurrence of headaches if she leaves them off.

Case 31.—Reported by Dr. H. Moulton. Miss S. E , age 24. Teacher. Fair health. Feb. 5, 1894. Eyes used with difficulty for three years. Blurring, pain in and behind eye balls, constant frontal headache. Homatropia correction + 0.25 D. S. ⌒ + 25 D. C. 90° each eye. These gave immediate and complete relief. Head has not ached since, and patient can read as long as she desires without discomfort, but any attempt to lay aside glasses is followed by discomfort until they are resumed.

Case 32.—Reported by Dr. Thos. E. Murrell. Miss Adah H., age 17. Good health. Headaches and tiresome vision, relieved by + 0.25 D. C. 90° both eyes. One year later wrote she had perfect comfort with the glasses, but leaving them off one day would bring on severe headache.

Case 33.—Reported by Dr. G. H. Price. Dr. G. H. P. (Myself); suffered with my eyes for about ten years, having been under treatment during each year more or less. Almost compelled to abandon college. Homatropia correction O. D. + 0.25 C. ax. 60°. O. S. + 0.25 C. ax. 90°. I have been able to read and study any time, and for hours without trouble, except now and then when I have a heterophoralgia due to muscular unbalance.

Case 34.—Dr. A. E. Prince. Frank K., age 32. Tailor. 1888 first seen. Conjunctivitis. Various astringents used for eyes. 1891. Gave him + 0.50 D. S., each eye. These gave him some relief but trouble persisted and other symptoms arose. Correction after repeated and careful treating under atropia + 0.25 D. C., axis 180° each. Gave entire relief. He is now able to do a large amount of work by artificial light as well as by daylight without discomfort.

Case 35.—Reported by Dr. Pinckard. Miss M. H., age 17. March 1, 1892. Had been under treatment for headaches over three years without relief. Insists that headaches have no connection with her eyes. Correction + 0.25 D. S. ⌒ + 0.25 D. C. Axis 90° and 80°. No relief for about ten days, affer which headaches gradually disappeared. March 5, 1894. Has been able to work without discomfort.

Case 36.—Reported by Dr. Chas. A. Oliver. Dr. ———, age 24. January, 1894. Severe asthenopia and lid irritation, unrelieved by local and general treatment for nearly ten years. Insufficiency of convergence so pronounced, that tenotomy had been advised. Fundi normal. Atropia correction + 0.25 D. C. 25° and +115°. This correction with 2° prisms, bases in, has been continually worn since, enables patient to perform an enormous amount of literary work without eye trouble. Twice through breakage lenses have been omitted for a few days with speedy return of old symptoms.

Case 37.—Reported by Dr. J. M. Ray. G. S., age 34. Druggist. Feb. 21 1894. Headache on use of eyes. Correction R. + 0.25 D. C. 90°. L. +0.50 D. S. March 6, 1894. Been using glasses with complete relief from headaches, but if eyes are used without glasses, headaches return.

Case 38.—Reported by Dr. S. D. Risley. Miss C., age 26. Art student. March, 1894. Weak eyes, headaches, etc. Correction R. +0.37 C. 90°. L. +0.25 C. 90°. At the end of the month reports perfect comfort at her work but is compelled to use her glasses.

Case 39.—Reported by Dr. G. C. Savage. Mrs. M. B. D. Oct. 21, 1892. Ordinary symptoms of eye-strain. Under homatropin O.D. +0.25 C. ax. 105°. O. S. +0.25 C. ax. 65°. Reports relief from eye-strain.

Case 40.—Reported by Dr. J. L. Thompson. Physician of rare intelligence and very hard student. April, 1887. Intense sufferer for weeks with head and eyes. Vision 20-30 each eye. No muscular trouble. Atropia correction. Vision 20-20 each eye with +0.50 D. C. axis 65°. Right, 0.50 D. C. axis 130°, left. Prescribed +0.25 D. C., axes as above. Benefited in a few days. In six weeks could read all he pleased and has continued to do so until this day. Has several times tried to do without glasses but the old symptoms promptly return.

Case 41.—Reported by Dr. R. L. Thompson. Spokane, Wash. Miss T., school teacher. So much trouble with her eyes that she seriously thought of giving up her avocation. For this I gave her in May, 1893, a pair of +0.25 D. C. 90°. I saw her yesterday (April 25, 1894.) She is delighted with her glasses and says she has had no trouble with her eyes since she got them.

Case 42.—Reported by Dr. H. V. Würdemann. Mrs. B., age 43. Neurasthenic. Asthenopia and headache, marginal blepharitis and chronic conjunctivitis. Correction +0.25 D. C. 90° ⊂ 0.75 D. S. for reading. Lenses give satisfaction for reading, but headaches continue. Gave +0.25 D. C. 90° each eye for constant use which have given relief to this time from all symptoms.

Case 43.—Reported by Dr. H. M. Starkey. Frances G., age

13. School girl. April 7, 1893. Had cerebro-spinal meningitis three years ago. Much pain in eyes and in head particularly at base, when eyes are used since. Very severe paroxysms of headache occur about once a week. Sunlight and lamplight painful. Patient looks dull and forehead is contracted. Correction +0.37 C. 90° each eye. April 12, no headache with glasses. June 1, no headache. June 13, no headache and light hurts the eyes but little. October 10, has had practically no headache since getting glasses and school has been resumed. The change in facial expression when the glasses were put on was very pleasant to see and she always afterwards came to the office with a smile.

Case 44.—Reported by H. M. S. Miss E. A. P., age 28. Oct. 17, 1893. Severe and almost constant supraorbital headache. Had come to visit the World's Fair but pain is so severe when patient enters the grounds that she fears she must go back home without seeing the Fair. Esophoria 10° and 12°. Homatropia correction + 0.37 C. 180° each eye. These glasses were prescribed and relieved head at once. Miss P. remained in city with but little eye trouble and attended the Fair until November 4, and had but one headache. Esophoria reduced to 6° and 4° by this time without other treatment. Have heard lately that Miss P. continues to wear the glasses with same comfort.

Case 45.—Reported by Dr. H. M. S. H. P. H., age 28. Bookkeeper. Oct. 25, 1893. Eyes tire easily and give out entirely if used much. Feel full of sticks after use. Homatropia correction +0.37 C. 135° and 45°. These gave entire relief and have been worn constantly since though eyes are used constantly and closely. I see Mr. H. frequently and suggested a short time ago that he might perhaps get along without his glasses now, but he said he is so perfectly comfortable with them that he does not care to try any experiments.

Case 46.—Reported by Dr. H. M. S. Miss M. G. H., age 19. School girl and later teacher. Feb. 21, 1893. Always has had much headache in brow and temples particularly if tired. Dull headache most of the time; worse at evening. Correction + 0.50 S. ⊂ + 0.25 C. 90° each eye. Likes the simple cylinders better and these are given and relieve the head. February 25. Headache relieved completely, but return if glasses are omitted and are again absent when glasses are resumed. May 20, 1894. Has much headache but not of the old character. Headache most intensified if glasses are omitted at all.

Case 47.—Reported by Dr. H. M. S. Miss J. H., age 25. Health much impaired from mitral heart disease. August 15, 1890. Eyes and head have been troublesome and painful for a long time. Correction + 0.25 C. 90° each eye. These glasses given and headache disappeared within a few days. Patient seen frequently since and says she can not get along

without glasses. Seen May 20, 1894. Says leaving off glasses a short time causes headache and if they are not resumed nausea arises.

Case 48.—Reported by Dr. H. M. S. Miss C. M. S., age 25. Eyes have been troublesome for ten years. Severe headache and eyes smart after use. Homatropia correction. R. +0.50 S. ⊂ +0.25 C. 20°. L. +0.25 S. ⊂ +0.25 C. 160°. After recovery from cycloplegia gave +0.25 C. 20 and 160°. These relieved head and eyes. Saw patient a number of times in the following two years and she always expressed the greatest pleasure in the use of the glasses.

Case 49.—Reported by Dr. H. M. S. Miss J. W., age 18. Teacher. Health good except headache Dec. 15, 1890. Always had much headache. Worse past year and there has been pain and heaviness in eyes in bright light and after using them. Correction +0.25 C. 180° R. —0.25 C. 90° L. These relieved the headache and eye-strain. Have been worn ever since with relief from pain in head and eyes and increased ability to use eyes. Pain returns if glasses are left off.

Case 50.—Reported by Dr. H. M. S. Miss Dora W., age 18. School girl. One of a family of sisters all having slight degrees of astigmatism with much headache relieved by proper correction. Dec. 6, 1889. Always had more or less headache, very severe and almost constant past two years. Correction +0.25 C. 180°. Dec. 14, 1889. Has not had a headache when glasses are worn. May 15, 1890. Uses glasses almost constantly. Does not have headache when glasses are worn. May 8, 1893. Lost glasses some time ago and headaches have been increasing until they are now very bad again. After examination gave same lenses which again relieved from headache.

WEDNESDAY—JUNE 6.

Section was called to order at 3:10 P.M.

Before the reading of the papers a case was presented by Dr. A. H. Voorhies, of San Francisco.

DR. VOORHIES—Mr. Chairman: You have kindly given me an opportunity of presenting a case which came in this morning unexpectedly. It was an operation which was so applicable to this Section that I asked my friend to allow me to present it here. It is a case of double cataract. Some of the members asked me this morning a question or two in regard to certain methods. I am not going into a long discussion on extracting cataracts, but I will say it has been my habit for twenty-five years of making a simple extraction. Never in the course of my life have I made an iridectomy, without its being an enforced one.

Again, in regard to the point of section, as to whether it should be at the lower or the upper section. I say in the majority of cases that is immaterial—I would as soon operate in the lower section as in the upper. I thought it would be of interest to the Section to see this case and therefore have brought the patient. The case illustrates also the method used now by many, of irrigating freely the anterior chamber, which I do in all cases that require it. If the cataract is senile and the greater portion of it is dense, we have no occasion for irrigation, but in all cases of cataracts in which the upper portion is wholly soft, then we are called upon to irrigate.

In regard to the knife—I have possessed recently some modifications of the cutting knife, that is, of having a very narrow knife, twenty millimeters in length, with a cutting edge one-half of its length on one side and complete on the other. The narrow blade will accomplish all that is to be done in the way of cutting—it can make a wound small or large, according to the section. In case of accident the introduction of the knife the wrong way, without withdrawing the knife, it can simply be turned over and the section finished without bad results.

Again, as to the method of irrigating. I use a syringe which I improvise at the time (showing.) The tube being placed in a bottle and the fluid drawn up into this bulb. In regard to the solution, I used simply distilled water, boiled immediately before the operation or at the time. I do not hesitate to irrigate the anterior chamber freely and have never had evil consequences from it, using distilled water. I have under certain circumstances used a solution of boracic acid, probably 1 per cent., and occasionally, a mere suspicion of common salt, using nothing in the way of bichlorid.

The report of the Nominating Committee was then read.

DISCUSSION ON DR. STARKEY'S PAPER.

Dr. H. I. Jones, San Francisco—I agree with Dr. Starkey about his paper. I think a great many of these cases require weak spherical glasses. Most all of them suffer from some neurotic trouble, or some condition which can be cured by constitutional treatment. They are often bilious. Give them some blue mass or a good dose of salts and a little

tonic afterwards and they will often get well without glasses, putting on colored glasses in the meantime.

Dr. Ellis—Mr. President: Somebody has remarked quite recently in our medical literature that oculists were getting to be simply expert opticians. I think, Mr. President, our oculists should be expert opticians, but to say they are only expert opticians is to say they are very wide of the mark. There can be no question in this day and generation, when the eyes are called upon for so much work and such continuous work that they must be under greater strain than they were in times past, and than they are in other countries where individuals are less on the move and more on enjoying themselves. I do not believe that all errors of refraction should be corrected. Many individuals pass through life with errors of refraction amounting to 1 or 2 D., either with astigmatism, or ametropia, without any discomfort and use their eyes a great deal. In the majority of cases, these are individuals in a healthy condition. There are other individuals who have only one-fourth or one-half D. astigmatism, who upon every effort of use of the eyes for close work have a reflex manifestation; frontal, vertical or occipital. Where we have these conditions as the result of eye-work, I think there can be no doubt that the oculist is justified in correcting the trouble. In my own personal experience, I have had more good results from correction of astigmatism of from one-half to one-quarter D. than from greater degrees, simply from the fact that in a low degree we usually have excellent vision, and the eyes are used to the utmost capacity, whereas in greater degrees we have more or less impairment of the vision, and there is not that constant strain that there is in close work where the vision is good. I am heartily in accord with Dr. Starkey in his views.

Dr. Simonton, San Jose—Mr. President, I have corrected a great many cases of optical error of one-quarter D., and as the gentleman has just said who preceded me, it seems to me that relief is sought in the low degrees rather than in the high degrees of astigmatism. In the high degrees the eye gives up endeavoring to obtain perfect vision, and hence there is less eye-strain, while in the low degrees the vision being almost perfect, the eye makes every effort possible to make

it perfect; hence, the trouble. As to the necessity of wearing glasses—I have not heard it mentioned, but I suppose it is your universal experience that a much larger percentage of females calls for the correction of optical errors than males. In my experience, I think it will amount to three-fourths females, if not more. For some reason, there are either not the optical errors existing in the male portion of the race that there are in the female, or else they do not call for correction. Is it because they are stronger or in better condition physically? It would seem that we would have the same amount of optical error in the male portion of our race as the female, but it is my observation that a much larger percentage of females require correction. There is a great difference in individuals.

A gentleman called at my office a few days ago, who was over 70 years of age. He had inflammation of the lids in mild degree and due to eye-strain in some shape. I found his glasses for short range work were two dioptrics. I came to the conclusion that he was myopic. Upon testing the individual with the letters at twenty feet, he was not ametropic. I suggested that he wear a stronger lens, as he was overtaxing the ciliary muscle, and he has done so since. I think it would be the unanimous expression of this Section that the low degrees of cylinder, especially the one-quarter and one-half D. are beneficial and their use is warranted in hundreds of thousands of cases. It has been mentioned here that persons may wear glasses for a long time and then cast them off and go without. My experience in that line does not indicate that many persons will do it. After the eye has been accustomed to the glass, and the optical error has been corrected, to take off the lens and put the eye under the old conditions brings on the trouble again, except in cases where the general condition has been much improved. Our experience leads us to conclude that very few persons with optical error can cast aside their glasses and not wear them.

Dr. H. B. Young, of Burlington, Iowa—My personal experience is that in a majority of cases, ametropia disappears, so far as the ordinary tests are concerned. I want to ask the advocates of the use of one-quarter D. cylinders to tell

me how they determine when they have found a case of one-quarter D. astigmatism. You must oftentimes take simply the judgment of the patient, and we know how unreliable that is. I do not believe we can *measure* it reliably by the ophthalmoscope. In my judgment, those advocating the one-quarter D. cylinder, do so on the reply of the patient himself. I have found, however, that there is one way of getting a little more definite reply in regard to the one-quarter D. cylinder, but I think the cure is worse than the disease. At the meeting of the State Society in my State last year, I presented a paper on this topic, and then called attention to the fact that I doubted if any one person could take the one-quarter D. glass, and on the ordinary test card tell when a one-quarter D. had been removed. They must have a plain glass in front of them to give them the idea of looking through a glass in the first place.

I have found that in nearly every case where a one-quarter D. cylinder was accepted, astigmatism would develop in almost every case. As a result of that experience, I have nominally discontinued the use of one-quarter D. cylinders. This applies simply to those cases which have equal vision. I understand the discussion does not apply to those cases which have very marked ametropia.

Dr. Baker, San Diego—I do not want to offer myself in opposition to the last speaker, but I would like to give my experience in this test. In testing by the use of a wheel, the radiating spokes placed at angles of 10 degrees, the inequality of the wheel can be determined in a large per cent. of these cases, and the inequality corrected and the relief of strain is marked at the time. In my own case, I showed the one-quarter D. minus astigmatism, which without the use of the wheel resulted in a plus astigmatism, the use of the plus cylinder being necessary. For six or seven years of my life I have suffered from migraine of a severe type. For six or seven years previous to the wearing of the glasses, I found that by a strict diet, taking away all meats, I could be reasonably free from the attacks. I put on glasses and worked and in the intervening time I have had four attacks of migraine, as against an attack of once a week or once a month, and these four attacks have been all I had, notwith-

standing the fact I have done as much work as I chose. The relief has been absolute, as I am thoroughly convinced. In reference to other cases, I have a number of them, and two of them were absolutely removed by having a one-quarter D. glass. Another case which had been diagnosed tubercular trouble, where there was persistent loss of weight and apparent serious lung trouble, was absolutely cured by the having of a one-quarter D. glass. I used atropin five days. I could only get the test with the wheel; I could not make it by the test pad. After putting the glasses on I told the patient I was disappointed, inasmuch as there were errors which could not be corrected by glasses, and on taking the glasses off the patient immediately complained of nausea; on putting them back again the nausea disappeared. And after wearing the glasses the condition of nausea disappeared absolutely. Within a few days the case disappeared entirely and the patient gained fourteen pounds in weight, and has been absolutely well since. The eye trouble may not have been the original cause of the disturbance; this is evidenced from the fact that for the last year she has been in perfect health without her glasses. But there can be no question that the relief was immediate at the time, and that the cause was the fitting of these glasses I see no reason to doubt.

Dr. Ryan, Galesburg, Ill—The remarks made have called into question the possibility of getting a correction by plus 25 or cylindrical 25. I have had considerable experience in fitting glasses in the last few years, and find it a very easy matter to make complete correction by the use of cylindrical 25. The ordinary patient would not be able to detect any particular difference in the letters, but if you use the wheel, as has been said, you can nearly always make a complete correction. You can not do it if the letters of the wheel are very close together, but if the wheel is very distinct and the lines are four millimeters apart you can always do it. I have a record of cases in which I am positive that dozens of them have been fitted in that way, and the difference could be noted instantly if we changed from 25 to 50, or *vice versa*. I have seen it so often that I am positive that the ordinary individual can detect those differ-

ences where we use a wheel which is clear and distinct, and the lines far enough apart so that you can easily recognize the lines. Where the lines are close together, it is in my opinion impossible, because there is a slight blur.

Dr. Price, Nashville—I rise to add my testimony to that which has been spoken on this subject. I received a communication from Dr. Starkey and one of the cases I noted in the reply was striking. That case required only the correction of twenty-five hundredths of astigmatism, and as with the cases related by the doctors here, it seemed as if the case were too serious to be accounted for by so slight a deviation from the normal; nevertheless, the correction was given and the patient was entirely relieved.

Another case that is striking is my own. I had suffered for many years,—I was almost compelled to abandon study when quite young on account of eye trouble. I was treated at that time by various general practitioners, who treated me for all troubles and conditions from granulated lids, as they supposed I had, with a firstrate attack of conjunctivitis, and I received no relief. I went from bad to worse for about ten years, when I had my vision corrected. At that time it was an absolute impossibility for me to devote exceeding fifteen to thirty minutes to consecutive reading at night without suffering from eye-strain. After that time, and since that time, I have been able to read almost indefinitely and what work I feel disposed to do I can do. If I confine myself to work for several hours consecutively without my glasses I feel the effect of it, but as long as I use them in proper position so as to get the benefit of the cylinder correction I proceed with my work without serious interference.

So, I am of the opinion that very frequently the great trouble lies in the fact that men presume that it is useless to make these corrections, and they do not give the patient the benefit of the correction. It is difficult to determine to the one-half D. whether they should be corrected or not, but I think by careful observation we may be able to determine it. As the gentlemen who have preceded me have said, it is almost impossible to do this by reference to the letters. We must resort to the radiating letters, and in this way we can arrive

at the proper direction in nearly every case. I do not attempt to place the position of the axis by the cylinder, if that cylinder is less than 75, but get the axis with a stronger cylinder and then reduce the cylinder to the required strength. As to the value of those lenses, I have every reason to have faith in them on my own account.

Dr. Davis, Stockton, Cal.—The last speaker suggested the idea of putting a stronger cylinder before the eye to locate the angle. I want to suggest that where I could not find any effect I have reversed the cylinder. Put the cylinder in at 90, turn it quickly and it very materially hurts the vision.

Dr. McDermith, Colorado—Mr. Chairman, on account of the confusion that exists in the minds of the profession, growing out of the editorial alluded to in the paper, and also the replies that have been made, and inasmuch as there seems to be somewhat of a unanimity on this subject, my experience (while it is not very extensive) certainly accords with that of the gentleman who read the paper and the most of those who have taken part in the discussion. Inasmuch as confusion exists and probably will exist, it seems to me that it would probably not be out of order for this Section to place the stamp of its approval in some way so as to make it more emphatic on one side or the other, and I move you that it is the sense of this Section that it is in accord with the paper presented by Dr. Starkey, meaning that the criticism of the editorial is about the proper thing.

This motion was seconded and a rising vote called for.

Dr. Simonton—Mr. President, just one word of confirmation. The gentleman at my right said that by using the one-fourth D. cylinder, it would not improve the vision. If we turn the one-fourth D. cylinder at right angles to the supposed proper meridian, invariably it obscures the vision, if a person has astigmatism—turn it back and the vision is improved at once. If we have one-fourth D. astigmatism, and take a one-half lens, it will be more so and there will be no doubt about it, thus determining that there is astigmatism and the vision is greater when the cylinder stands in one position than when it stands in any other position.

Dr. Young—That is my point—if there is a $\frac{1}{4}$ D. astig-

matism and you turn a 4 D. lens to the opposite axis, it will give the effect of a one-half D. lens.

DR. SIMONTON—I have put the motion in the form of a resolution, which is as follows:

"*Resolved*, That it is the sense of this Section, deduced from actual observation and experience that the one-fourth D. cylinders have a permanent and important value in correcting myoptic errors."

I offer that as an amendment.

DR. MCDERMITH—I offer the amendment, "may have," without committing ourselves to the assertion that we believe in every case.

THE CHAIRMAN—It is rather an important matter, if we are going to pass a resolution, that we do it in such a way that we will not be ashamed of it afterwards.

DR. JACKSON—Mr. President, with reference to this resolution, while I am thoroughly in accord with the views of the speakers, and the gentleman who offered the resolution, as to the value of the remedies, I think that a formal indorsement on any grounds of any measure in therapeutics would be entering upon dangerous ground, and establishing a precedent that may trouble us in the future, and unless such an expression is clearly needed and meets some emergency, with which I am not acquainted, I think it would be better for the Section not to take such formal action.

DR. EATON, Oregon—Mr. Chairman, I wish to emphasize what Dr. Jackson has said. There are many other points in ophthalmology which may come up and might require some sort of resolution, and we would find ourselves making resolutions until we become the laughing stock of our brethren. I therefore enter my protest against this resolution.

DR. GIBSON—What would we say of the Section in Materia Medica, if they should adopt a resolution similar to this one, saying that calomel in one-twentieth grain doses has its merits.

DR. PRICE—I would suggest that this is a thing which can be demonstrated mathematically, and that can be demonstrated only by the individual case.

DR. MCDERMITH—I do not think that question has been raised. And it is not likely to be—the question of one-twentieth of a grain dose of calomel.

Dr. Briggs—Mr. President, I do not favor this resolution from the fact that it is a matter of opinion largely. In regard to this opinion, I do not think it has been demonstrated as a positive fact that the 4 D. lenses are of so much value or so essential that it is necessary for us as a Society to resolve that they are beneficial. We can use them and believe in them and find them good in a good many cases, but I think the resolution would be rather a backward step for this Section to adopt. It seems to me the almost universal indorsement of the paper itself is a sufficient indorsement of this Section, without the adoption of a resolution.

Dr. Starkey—I think the resolution is hardly necessary. I do not think it would make any difference with those who do not use them. I move that the resolution be laid on the table.

This motion was seconded.

The Chairman—The motion has not been stated by the Chair, and I think there is no motion before the house.

Dr. Starkey—There have been several things brought out in the discussion, much more emphatically than I had gone over them. I should like to say, in the line of argument of the gentleman who spoke second, that more good results from low degrees of correction are found. That was expressed by the doctors in their replies—that they found in a given number of cases more cases of a low degree of error in which correction was made, than in the higher degrees. Dr. Simonton spoke of the constitutional test as being important, and I also dwelt somewhat upon the fact that I thought most of these cases, if they could only stop work would get well without glasses. His experience in regard to females being in larger proportion is somewhat different from mine, probably because I have a large nnmber of medical students who raise the proportion, so that I should think I had fully as many young men as women on my records. The fourth speaker said he thought it would be the unanimous sentiment of this Section that the low degree lenses are of great importance—that lenses were seldom omitted after being worn. That is not according to my experience. It is to be hoped in the low degrees, that when the general health improves the ocular health will

improve, and they will be able to leave them off, especially in the students and school children, and in book-keepers who get through with their work, so that the eyes are not used so much at the end of the day. I think the statement of Dr. Young that you can not tell within one-fourth D. was answered by others. One point you must have noticed, and it has not been alluded to, is the expression of the patient's face. How often you see the patient with that characteristic appearance of asthenopia, the corrugated brow, the scowl—and when the 4 D. lenses are placed before the eye at the right angle, the face clears up and the physician can tell by the expression of the patient's face that you have something beneficial, and the patient returns to the other condition if the lens is reversed. In the test for astigmatism, the test by the radiating wheel, the reflex or shadow test was entered into quite fully. I know that persons become so expert that they can tell readily a one-fourth D. astigmatism.

ASTHENOPIA.

BY C. M. HOBBY, M.D.
IOWA CITY, IOWA.

Asthenopia is to the visual function what dyspepsia is to the digestive, a congeries of symptoms differing somewhat according to the pathologic views of the physician in charge, and often like dyspepsia cured by the physician instead of by the prescription. As ordinarily employed, without reference to pathology, it comprises several groups of symptoms following the more or less prolonged use of vision at short range, but it is sometimes made to cover uncomfortable vision at all distances; the same symptoms occurring to a presbyopic patient are not usually considered asthenopic, although some logically include unrelieved presbyopia with asthenopia. Not infrequently reflex disturbances, unconnected with the visual organs, are considered as asthenopic phenomena; blepharitis marginalis, which is apparently frequently caused by refractive errors, and mild forms of conjunctivitis, are sometimes considered as symptoms of asthenopia rather than as causes for the ocular discomfort. Accepting hyperopia, especially when associated with astigmatism, as a cause for headaches, and even of the more violent migraines and hemicranias, and believing, as we may, that epileptic attacks have ceased after the correction of refractive error, do we not recognize under all these circumstances that the refractive error is only one factor in the cause, and that back of all there exists a predisposing systemic condition?

Without attempting to describe or define all the symptoms which are grouped around the term asthenopia, patients complain of "sandy feelings," "itch-

ing," "smarting," "sticks in the eyes," etc.; symptoms due to hyperemia of the conjunctiva, frequently accompanied by redness, lachrymation, and photophobia; again patients describe their difficulty as "pain in the eyes," "pain over the eyes," "drawing of the eyes," "brow ache," "headache," "shooting pains through the head," "hemicrania," "migraine," etc., some complaining that the pain comes on at once if they begin to read (or use the eyes at short range); others that they feel it if they use their eyes for half an hour; others who persist in reading or in work, especially sewing girls, that they have headache every afternoon except Sunday afternoon; these are the symptoms of overwork and occur normally when the individual uses the eyes too long, just as fatigue follows any excessively prolonged exercise; occurrrng after only a moderate amount of work, these symptoms are especially entitled to be called asthenopic. Another group of symptoms frequently referred to by patients concerns the visual act; "blurring after reading for a time," "have to change the position of the book," "see spots moving across the page," "sometimes see double," etc., and this group, like the last, may represent the effects of overwork, or when the symptoms occur after only moderate use of the eyes the symptoms may indicate disordered muscular coördination of either the intrinsic or the extrinsic muscles of the eye.

It would be of decided advantage if the term, asthenopia, could be restricted in its meaning to the effects produced by the use of one or both eyes, burdened by some abnormal increase in the muscular labor of vision; that is, some burden upon the accommodative function, internal or external; but the symptoms called asthenopic occur in perfectly normal conditions, at least so far as the visual organs are concerned, and we are compelled to consider these cases with others.

No special form of refractive error appears to predominate in asthenopic cases; out of 1,205 cases of re-

fractive error applying for relief from all causes, 58 per cent. complained of asthenopic symptoms; that is the continuous exercise of vision was accompanied with more or less discomfort. Of these cases, 77 per cent. could be considered hyperopic, and 23 per cent. myopic; 31 per cent. had hyperopic astigmatism and 14 per cent. myopic astigmatism; that is 45 per cent. of the asthenopic cases were astigmatic, against 40 per cent. of all cases, showing that asthenopic symptoms occurred in a little larger percentage relatively of astigmatic cases; but this is because the low grades of astigmatism, where there is little impairment of vision, only come under the observation of the ophthalmologist when the patient is suffering from some form of uncomfortable vision.

When we come to consider the great number of cases who have defective vision, from refractive and other causes, but who never complain of those symptoms called asthenopic we are forced, I think, to the conclusion that asthenopia indicates inadaptability to environment, and that it is the individual and not the eyes that are asthenopic. What is true in regard to errors of refraction is apparently true of the so-called muscular asthenopia; while records of heterophoria are not so extensive and the observations made lack the ripening effect of time, and while as in astigmatism of low grade the subject of heterophoria does not consult the physician unless there exists some form of uncomfortable vision, enough observations have been made to show that heterophoria without asthenopic symptoms is sufficiently common, and to lead to the belief that it is not to the muscular insufficiencies alone that the occurrence of asthenopia of the variety termed muscular is to be attributed.

When we observe the different expedients that at times afford relief to asthenopic symptoms, the same lack of coherence is to be found. Patients will often report that they have great relief from glasses that have increased instead of diminished refractive error;

the spur of necessity often banishes difficulties of this kind; the uterine specialist, the rhinologist, and the electrician all number asthenopia among the ills relieved by their special methods; and tenotomies that have increased heterophoria have in some manner relieved discomfort.

As asthenopia is not a necessary result of any of the various conditions to which it has been attributed, and is yet often cured or materially improved by relief or attempts to relieve real or imaginary causes of increased effort, or by training the internal or external muscles of the eye, as well as by systems of muscular exercise, we can not do too much towards establishing some basis for efforts at relief that shall be less empirical, without substituting a dogmatic physiology of the function of vision. And it is well at this time to protest against the tendency to consider everything connected with the visual organs, as governed by inflexible mathematical formulæ. The evidence is not in, which compels us to believe that the muscles of the eye are innately endowed with certain coördinative functions, or that they have a brain center which is prepared to correlate their movements without the necessity of the training that experience gives, or that their functional activity is exerted under different laws from those governing the rest of the muscular system. It may be believed that the coördinated movements of the muscles of the eyes to perform a given task is the result of the same kind of practice, the same kind of training that pursued through a long time gives to the fingers and hands of the typesetter or the musician their distinctive skill, the same kind of training and experience that the babe must go through with before standing on its feet and walking.

A man accustomed to the work may saw wood for ten hours, a woman may busy her fingers in knitting for the same length of time, but the man unaccustomed to the saw would soon find back and arms complaining of the unwonted labor, and the

inexperienced knitter would soon feel fatigue in the fingers; the same is true with those who attempt to use the eyes at new and prolonged tasks; the adult whom will or circumstances kept from studious habits in early life, suddenly attempting to make up lost time; the woman who is suddenly deprived of her means of support and who attempts to gain her livelihood by sewing; the active man who attempts to confine himself to book-keeping; all of these are likely to exhibit asthenopic symptoms whether they have refractive error or not; correcting visual disorders is of undoubted service to them, but complete relief awaits their adjustment to environment.

Another numerous class who continually excite our sympathies, and who are preyed upon by spectacle vendors are those who are attempting to work with their eyes for lengths of time out of all proportion to their physical strength; seamstresses who ply the needle from 7 in the morning until 6 at night, and desire glasses to enable them to put in extra hours by artificial light; such cases, like some opticians, look upon the eye purely as an optical apparatus that only requires a little mechanical adjustment to go on with its work.

Ill health is a fertile source of asthenopia, and with impairment of general health we find refractive errors assume a greater importance than would otherwise have been the case; here relief of the ocular strain often proves to be not only an assistance to the use of the eyes but also to the efforts to improve the general health.

Sometimes an individual is unable to concentrate his attention upon the work in hand and uses the eyes at irregularly varying distances, and in various positions as to light and direction of the object looked at, and thus multiplying work unnecessarily, suffers from fatigue where systematic work would have been borne with ease; the student who without interest pursues his task and constantly suffers may become interested in a novel and spend hours with

no symptom of "eye-strain;" there is less likelihood of fatigue when the mind is on the work, and there is much less irregularity of muscular work.

But in recognizing asthenopia as depending upon something more than disturbance of the purely mechanical part of vision, it is not necessary to reject the assistance afforded by mechanical measures in the treatment. We can believe that the most perfect possible adjustment of glasses will often fail to cure asthenopia, and that a large proportion of cases can be cured without glasses, without at all underrating the use of optical appliances. While fortunately, we are unable to trace very grave pathologic changes to misfits in spectacles, yet it seems as though it were time for the medical profession to call a halt upon the indiscriminate optical treatment of asthenopia, by those who have no knowledge of general pathology, or even physiology, and who consequently see in "eye-strain" only disorder of the looking-machine. Where rest is needed, and where exercise and training are required, where asthenopia is a symptom of a general disorder, or where a patient numbers fatigue of vision as only part of general nerve disturbance, equally with the optical imperfections that take from the patient that soundness of body which with the sane mind is required for the perfect use of all the senses as well as all the muscles, all these conditions fall within the province of the physician and are entitled to his thorough scrutiny.

CYCLOPHORIA, ITS DETECTION AND TREATMENT.

BY GEO. H. PRICE, M.D.
NASHVILLE, TENN.

Cyclophoria or the rotary tendency of the eye upon its antero-posterior diameter under certain conditions, known also as insufficiency of the oblique muscles, is now a matter of record upon the case-books of so many, as to no longer be a question of speculation. When the question of insufficiency of the obliques in certain cases of oblique astigmatism, was first presented and fully elucidated by Savage, of Nashville, Tenn., there was in the minds of some room for doubt as to the verity of the statement, but I am now ready to believe that this statement is received as a fact, by those who have given the question sufficient thought and have applied to it those tests which we now have at hand for demonstrating this condition.

For a long time only the grosser errors of balance of the obliques were considered of importance, and the methods of arriving at conclusive evidence were of such a character as to render it difficult, if not impossible, to bring out this defect unless well marked, or the patient was of that class of observers upon whose statements one can rely with certainty. These difficulties have been overcome, and the means of detecting the condition have been so much simplified that to-day we can not only detect but determine in degrees even small variations from the proper adjustment of these muscles.

Cyclophoria is not only found in oblique astigmatism, where we would naturally expect it, but is also present in many cases where there is no obliquity

of the astigmatic condition and also in cases in which there is no astigmatism at all; so we must conclude that it is not only a complication in some but in all forms of focal error, to such an extent as to cause it to be looked upon as an important factor, which requires us to exert ourselves in detecting and applying the necessary treatment. I have compiled a table of two hundred cases from our case books, showing the various forms of focal error and the muscle conditions complicating each, as well as the percentage in the whole, of each muscular variation. This condition as a causative factor in the symptoms of eye-strain is of prime importance, for if neglected, though all other conditions have received proper consideration and have been eliminated from the catalogue of complications, yet there will be complaint from your patient until you have met this feature and applied the proper treatment. Hence it becomes necessary to recognize the cyclophoria and be prepared to give your patient the benefit of treatment which can be successfully carried out.

It is now a well established fact that the tests for exophoria and esophoria must be determined before the use of a mydriatic, since the suspension of accommodation alters these muscular relations to such an extent as to mask the true condition, but in the case of cyclophoria the test can be made before and also after suspension of accommodation and the result relied upon as trustworthy; however, it is well to note it both before and after use of homatropin or atropia, to be satisfied upon this point.

The causes of cyclophoria, like those of other phorias, are dependent upon a variety of conditions, one or several of which may obtain in the same case.

I will call your attention first to that cause which gave the initial impetus to investigation in this line, viz., oblique astigmatism. In the first place, it is to be noted that if the astigmatism is of such a character that the meridians of greatest curvature diverge above, the superior obliques are kept constantly

in a strain in an effort to converge the naturally vertical meridians so that corresponding portions of the retinæ shall receive the same impression. This constant effort induces fatigue or wears out the normal contracting power of the superior obliques and thus induces an insufficient action, relaxation or cyclophoria.

Again, as the inferior oblique acts in conjunction with the inferior rectus, and is augmented in its action by the action of the former, and as the inferior rectus is constantly in action during all efforts at near work, an extra amount of duty is hereby imposed upon the superior oblique, which extra work it frequently finds impossible to sustain, the failure manifesting itself in cyclophoria. This complementary action of the inferior rectus can be easily demonstrated, and has been noted heretofore, hence it is a factor in cyclophoria of that variety involving the superior oblique.

Again a faulty insertion of the external and internal recti will augment one or the other of the obliques in their action, thus becoming a factor in the production of this condition. This condition of variable or faulty attachment has been observed by all who have operated on the tendons of these muscles. If the tendons of these muscles are inserted more below than above the horizontal diameter of the eye, then we find that the internal rectus augments the action of the inferior oblique while the external rectus will assist the superior oblique, but as cyclophoria manifests itself principally when the eyes are in a state of convergence, when the internal rectus is stimulated into action and the external is in a state of more or less relaxation, we can readily see that as a result the muscular equilibrium of the obliques is overcome and the superior muscle fails to accomplish the extra duty demanded of it.

If we should have these muscles placed correspondingly above the horizontal plane, then the reverse would obtain.

So also can we find that faulty attachments of the superior and inferior recti may complicate the action of the obliques.

Faulty attachments of the obliques themselves are to be considered as factors; especially is this probably the case with the superior, since there are two points at which faulty adjustment may creep in, viz., their insertion on the globe of the eye and their physiologic origin, the trochlea. The latter may become elongated from protracted tension, or it may be located too far posteriorly, either of which conditions would result in deficient action. Failure of development of the obliques, or lack of innervation may also be remembered as probable causes of insufficient action. It is, of course, a difficult question to decide as to the immediate complicating causes of each case, but then the probable factors may be held in mind.

A very noticeable fact, in the study of this condition, is the frequency of that form involving the superior oblique and the rarity of that in which the inferior oblique is involved.

From a table of two hundred consecutive cases, taken from our records, before alluded to, I find cyclophoria, insufficiency of superior obliques, in 25 per cent. of all cases (the same percentage has been noted by others) while there is but ½ per cent. of cyclophoria in which the inferior oblique is at fault. There must be a reason for this and I think it can be accounted for in the following way:

The third nerve, known as the motor oculi, presides over the greater portion of the muscular machinery of the eye and is that nerve which is called upon most frequently. In convergence and accommodation there is direct stimulation of all of its fibers except those which supply the superior rectus, hence we see the inferior oblique augmenting the action of the other muscles while the superior rectus, a part of whose duty it is to antagonize the inferior oblique

and inferior rectus, is in a state of relaxation, partial or complete.

Again the superior oblique by its action aids in depressing the cornea, by drawing up the posterior part of the globe, at the same time producing slight abduction, and in this very fact while aiding in a general way, also partially counteracts, its own special function. How is this accomplished? In producing abduction it tends to turn the entire anterior part of the globe outward, but in this it fails, for the lower half is prevented from making this outward excursion by the combined action of the inferior and internal recti and inferior oblique. In this I think we have a sufficient reason, and it seems to be borne out by the additional fact that those who make near use of their eyes are those who suffer most from cyclophoria of this type, though there are exceptions.

Let us now look into the question of detecting the presence of cyclophoria in any given case. After having tested the lateral muscles, before homatropin or atropia has been instilled into the eyes, and these are noted for the near and distance, then with the same double prism in front of one eye, thus producing a double image in that eye, we hold a card (on which we have a well defined red or black line) in front of the patient. The eye in front of which is the double prism will see two lines upon the card while the uncovered eye sees only one line. The card must be held in a plane parallel to the plane passing through centers of rotation or tangent to the corneas of the eyes, otherwise the two lines seen by the eye, in front of which is the double prism, will not be parallel. Now if there is no defect in the balance of the obliques then the middle line is parallel to the other two lines, and is half way between them (provided there is no hyperphoria or cataphoria) but if there is insufficiency of either of the obliques then the middle line will dip at one end or the other, according to the condition present.

If the double prism is in front of the right eye, the two images being seen by this eye, and the middle line seen by the left eye, is inclined to dip at the right hand end, then we know at once that the superior oblique of this eye is failing to do its duty, thus allowing the perpendicular meridian to rotate outward or the horizontal upward at the inner extremity, where the line is seen to rotate or move in the opposite direction, that is downward at the right end. If this dip is but slight the eye will adjust itself so quickly to the faulty condition by a demand upon the superior oblique, that the patient may fail to discover the lack of parallelism with certainty. Instruct him to close both eyes gently for a few seconds, this rest causing the muscles to assume their ordinary relations, then when he opens them tell you if the lines are still parallel. This little procedure takes the eyes off their guard, consequently when he opens them if the cyclophoria is present the middle line will be seen slightly dipping, but soon the guiding sensation of the retina calls upon the oblique and after a few slight oscillations it may assume a parallel position, or so nearly so as to render it difficult for some to discover the lack. If there is reason to suspect the presence of cyclophoria, and your patient is not a careful observer, then we have a proof test which can be applied with much satisfaction. To apply this test the frames should be adjusted to the pupillary distance of the patient, then with a cylinder, say 2 D. in front of the eye being tested, (which is the left in this case) having the axis at 90°, which position does not affect the result, turn the cylinder to 100°, thus throwing additional strain upon the superior oblique, and almost immediately the patient will say the line is dipping to the right. If now the cylinder is brought back to 90° the lack of parallelism is still observed and it will have to be moved to, say 80° or 75°, before the middle line will come up to its proper position. In marked cases of this condition the 2 D. cylinder, and in some rare

cases, even a 3 D. cylinder must be rotated to 45° before parallelism is established and maintained. In case the inferior oblique is deficient the dipping is reverse; that is, in the left eye the middle line dips to the left, therefore in case the proof test has to be applied we would have the reverse position of the cylinder in the foregoing. If the condition is suspected and the proof is applied, the cylinder being turned to the right or 100° and then to the left or 80° and the same amount of dip, first to right and then to left is noted, we conclude that there is no cyclophoria.

There is another test for this condition which I have devised and used in a crude form in some cases, which may prove of service. The testing apparatus is a combination of the double prism and the Maddox rod in front of one eye and the rod in front of the other, and is used in conjunction with the candle or gas-jet at twenty feet. The double prism converts the single line of light made by the rod into two lines, which lines are parallel and about 18″ apart, while the rod alone in front of the other eye produces a single line of light, which should be half way between the upper and lower lines (provided there is no hyperphoria or cataphoria) and parallel to them. If cyclophoria is present there is a deviation or dip which will be of the same character as that shown by card test at eighteen inches. This little device I present for your inspection. Though this condition at first was looked upon as one to which no treatment could be applied, yet I am glad to say that through the study and investigation of my friend Savage we are now in possession of a plan which in our hands has proven most satisfactory, and to this I will now direct your attention. It will be remembered that in making the test for detecting cyclophoria we made use of a cylinder, by means of which we can increase or lessen the strain upon the oblique muscles. This principle is made use of in the treatment of this condition.

It is a well established practice now to exercise the recti muscles, and this is done by gradually increasing the strain upon the individual muscle by the use of prisms so placed as to call the muscle into action, and the same plan is followed in the case of the obliques, but we use the cylinder instead of the prism.

If the patient under treatment is suffering with cyclophoria superior (insufficiency of superior obliques) we then with a cylinder of 1.50 D. in the frames, and the patient looking at a light fifteen or twenty feet distant, we begin by turning the cylinder in the right to 75° and that in the left to 105° (thus putting the superior obliques slightly upon the strain) and instruct the patient to raise and lower the frames every four or five seconds. Looking through the cylinders at the light induces slight action or contraction of the obliques and raising the cylinders allows them to relax. This is continued for say five minutes, after which the cylinders are again turned, in the right to 60° and the left to 120° and the patient put through the same exercise as above mentioned, continuing it for three minutes. This causes increased action by reason of the fact that the cylinder in this position causes greater strain upon the obliques in their effort to overcome the greater deviation from the normal condition. Finally the cylinder in the right is turned to 45° and in the left to 135°, and the exercise repeated for two minutes. This position of the cylinder causes the maximum strain upon the obliques. If the cyclophoria is inferior, or insufficiency of the inferior obliques, then we pursue the following method of exercise:

With frames on and cylinders in them, we place the cylinder in right at 105° and in the left at 75° and exercise as before directed by raising and lowering the cylinders in front of eyes while patient looks at the distant light. Then move cylinders to 120° in right and to 60° in left, and finally to 135° in right and 45° in the left. This exercise should be taken

twice daily for a time, though the amount of exercise may be varied according to the symptoms manifested by the patient; for instance, if the patient complains that the exercise causes pain, then instead of taking the full amount, this can be altered to suit the case; thus allowing him to exercise only one-half or even one-third of the time divided between the three steps, or even allow him to exercise for the full time with the cylinders in the first position, and gradually increasing as the patient will bear it.

It will be well to bear in mind the fact that the symptoms of which the patient has been complaining will in many cases disappear before his cyclophoria does, hence it is well to keep him under the influence of the exercise for some months, resorting to it daily or every other day, or even once a week. This treatment has proven of the greatest benefit to many patients upon whom it has been tried, and I have great confidence in it.

We must keep in mind the fact that cyclophoria is a condition which must influence us in the adjustment of lenses, and especially those in which we find a cylinder needed for the correction of astigmatism. While in cases where the axes of the cylinders are seemingly at 90° in each, when the eyes are tested separately, both with lenses and ophthalmometer, yet we may find that the cyclophoria, say of the superior obliques, may prevent the comfortable use of the glasses if the axes are allowed to remain at these points. More particularly is this the case if you have noted any disposition of the cylinder in the right to go toward 100°, and that of the left toward 80°, which positions would be favorable to the weak superior obliques.

Again, if your ophthalmometer shows in the right the position of the cylinder to be, say 100° with tendency to 105°, and in the left the axis is to be at 80° with tendency to 75°, and the test lenses showing the same tendency on the part of the cylinders, it will be advisable to place the cylinders at 105° in

right and 75° in left, thus removing the strain from the obliques, and at the same time correcting the astigmatism. If the axes of the cylinders converge above, from the nature of the case this increases the strain upon the superior obliques, and consequently this must be remembered, and due allowance made for it. In such a case say the cylinder in right by the ophthalmometer should be at 60°, and in left at 120°, that is the axes converging above, and that test lenses confirm this, but that the cylinder in right tends to 65° or 70° and in the left to 115° or 110°, then it would be good practice to favor this by placing the cylinder at 65° in right and 115° in the left, thus decreasing the convergence, thereby removing a part of the strain from the superior obliques. Unless these points are watched discomfort follows, as I have learned by experience. A case or two bearing on these points may be of service:

V. S. P., real estate agent, came complaining of his eyes. He was using lenses which were unsatisfactory. Under homatropin his condition was as follows:

O. D. V. 20-xx w. + .25 ⌒ + .50 cyl. ax. 80°.

O. S. V. 20-xx w. + 1.50 cyl. ax. 90°.

Each eye was tested while the other was covered by disc. These lenses were given him and he began to use them. In a short time he found the left eye so painful as to hinder him in his work. This lens was changed and had substituted therefor +.50 ⌒ + 1.00 cyl. ax. 85°; this position of axis seeming to be preferred at this time. This was much more comfortable though vision was not so good. After a time we put in the +1.50 cyl. ax. 85°; this gave him comfort and good vision at the same time. You see this allowed the axis to converge less above, thus reducing the strain on the superior oblique which brought the ease. We did not fully appreciate the significance of this at the time, but now since we know the part played by the superior obliques in such cases it is apparent. We noted later cyclophoria superior.

Another interesting case is that of Mrs. B. H. R., who consulted us about her eyes; this was about the same time as the above named patient. She was refracted and the following record made:

O. D. V. 20-xx w. + 1.00 cyl. ax. 70°.

O. S. V. 20-xx w. + .50 ⌒ + .50 cyl. ax. 110°.

This was given for distance and a 2.00 D. each for reading to be worn in front. This was in 1891 and the patient, who

resided out of the city, was not seen again until a few weeks ago, when she stated substantially as follows: Can not use the distant glasses all the while as they cause pain in eyes, most marked in right (where she has the strong cylinder at 70°, increasing the strain upon superior oblique). Has been more comfortable with a simple + 2.25 used for near work. Cyclophoria superior being present, and detected at this time, she was put on exercise for same, and told to use her glasses for distance.

Two weeks later she reported again with some improvement but not comfort as yet. At this time the cylinders were revolved in the frames, the right to 80° and the left to 100°, exercise continued, and patient to report in two weeks. The two weeks having passed she reported, and her condition was flattering; the annoying symptoms having subsided and she was wearing her distant lenses all the time. The cyclophoria being also reduced by the exercise showing increase in strength of the superior obliques, the lenses were turned about 2° back toward their original position.

The last case to which I will call your attention is that of Mrs. T. M. O., who came complaining of the ordinary symptoms of eye-strain. Under homatropin we found the following condition:

O. D. V. 20-xx w. + .75 cyl. ax. 90°.
O. S. V. 20-xx w. + .50 + .75 cyl. ax. 90°.

Four degrees exophoria in near, before use of homatropin. Cyclophoria superior, slight. This correction was given her and she was put on exercise for the exophoria as this was looked upon as probably the most annoying factor in her case. When she received the lenses and began the use of them they gave her trouble. She applied to an optical company and their refractor gave her a cylinder for the left of + .75, the axis being at 75°. This gave her relief since the position of this cylinder took the strain off the weak superior oblique and put it on the inferior, which was more able to perform extra duty. In this case it would have been better to diverge the axes in both, placing the right at 95° and the left at 85°. It must be remembered that this change in the position of the axes of cylinders where cyclophoria is present should be used only as a temporary means of relieving the symptoms (for it does not remove the cause), until the insufficient obliques can be brought up to normal activity by the proper exercise. Hence the lenses may be turned in the frames to induce comfort, while the exercise of the obliques is resorted to, and as the obliques recover full power the lenses can be gradually revolved to their original and correct positions; then with exercise, as may be demanded by the case, we should expect to see the patient get complete comfort.

There are in these cases, as in all cases, factors of individuality which can only be known and watched by the physician in charge, and upon close attention to these will often depend our successes or failures.

DISCUSSION.

DR. EATON—In my paper yesterday I put myself plainly on record as opposed to this theory of cyclophoria. It is hardly worth while to go into detail. I wish, however, to present two arguments which I did not present in my paper. There are a very large number of men in the profession who do not believe in this theory, far more than I think the reader of the paper will admit. One of the greatest reasons I have brought against this theory is the inability of many persons to find one who has not the phenomena—in whom we can not bring out the phenomena by the very means he has described, of insufficiency of the sphere of light. The greatest objection that has been made (not by me but by others) to this theory, is the interference with these cylinders, the ignoring of the ancillary muscles in the interests of the oblique muscles. I also refer to the paper to-day by Dr. Hobby, who says that in cases of asthenopia supposed to be caused by cyclophoria, the majority of the cases are caused by ametropia and not by hypermetropia. Referring to the fatigue which Dr. Savage attributes from his exercise with cylinders, to the exercise or strain put upon the oblique muscles—nobody, who has not had astigmatism corrected by cylinders put on—can look through cylinders at any time without suffering a certain amount of strain. He details the fact that when the cylinders are turned or worn for awhile, the strain is felt to be upon the obliques. This is pure assumption. I will draw attention to the fact stated, of the rarity of the insufficiency of the inferior oblique muscles. Now, it has been practiced as I said yesterday, known for twenty years that rotation of the eyes upon their posterior axis takes place in convergence, and I have satisfactorily proven that such rotation takes place in convergence at a distance of twenty to eighteen inches, and increases in proportion as the objects are brought nearer. According to the experiments made by Dr. Savage's test, or by the

cylindrical prism, that all this immediately disappears as soon as the object is 45 degrees below the primary plane of vision. Meissner attributed this fact to the action of the inferior oblique muscle. Another thing that Dr. Savage nor Dr. Price ever has done—submit to the profession a series of cases followed out an adequately long time in which, after the exercise has been followed out, any relief which is claimed has been secured, whether the same careful testing obliquity of the line is present or not. I venture to say, no person can be found in whom any amount of exercise can overcome the inevitable rotation of the eyes and convergence. If any person will put the candle at twenty-five feet and put the cylinders before their eyes they will find that there is not the slightest incentive to any fusing of the light—supposing the cylinders are put on an oblique so as to cause the lines of the candle to be drawn out at an angle—place the cylinder with the axis nearly vertical, and you get the horizontal line. There is no such incentive as in a line drawn upon a piece of paper, but there is a decided strain upon the ancillary muscles, caused by the cylinder.

Another thing I draw attention to is the insistence on Dr. Savage's part that such weak cylinders as one-half or one-fourth D. or 110 degrees or 105 degrees—that such a slight change will bring a strain upon one or the other oblique muscle. As I understand, the change made in the cylinders by Dr. Savage favors one muscle or the other, in the case of very weak cylinders. Again, he attributes a very weak amount of astigmatism, such as one-half or one-fourth D. as causing a strain upon the oblique muscle. I said decidedly yesterday that the amount of disturbance of the retinal image caused by a strong cylinder of 2 D. is considerably less at a distance of thirteen inches. The 60 degrees of variation becomes 40 degrees, at 45 degrees, its greatest deflection. You can therefore imagine how much deflection on the cornea is caused by an astigmatism of one-half D.

I wish to say in making the opposition I have to this theory, I am actuated by a conscientious motive. I do not believe in the indifference shown to theories which have not been worked out with due deference and care when they are originally presented to the profession. I may say that this

theory was sprung upon the profession without due regard to the writings of physiologists, nor with due consideration of the facts which I have given, and I believe it takes the attention of the future ophthalmologists from things which they should attend to, to things for which there is no foundation.

Dr. Erwin, Mansfield, Ohio—Mr. Chairman, unfortunately, I was not here early enough to hear Dr. Price's paper. And I have not studied Dr. Savage's doctrine enough to know all that there is in it, but there is one point I notice. It is that the oblique muscles are affected by the cylinder, especially if the cylinder is an oblique cylinder. The disbursement of the image on the retina by the oblique cylinder gets up a new kind of action on the part of the eye. The muscular action of the eye is so habituated that it becomes almost, if not altogether, involuntary. Now the least deviation from the habitual impression of the object upon the retina causes a complete change in the use of the oblique muscles of the eye, so as to require a voluntary action on the part of the oblique muscles. When you have upset the habitual action of these muscles, and you make it necessary for a voluntary act on the part of the muscles, you see how likely you are to get a disturbance of that muscle in a short time. It is my observation that oblique cylinders had better not be prescribed at all, if there is only a low degree of astigmatism, unless you have a patient that is willing to suffer a good while before the muscles acquire their new use, that they have to acquire before they can become comfortable.

Dr. Simonton—Mr. Chairman, I do not wish to make any technical argument on this subject, for I do not know anything about it. I confess I have not given it sufficient consideration, but wish to say that when Dr. Stevens first brought out his ideas in regard to hypermetropia, the whole profession pooh-poohed it—it could not be so, it was impossible—the results which he claimed could not be true. It has been demonstrated that most of the positions which he took are true. Now, this theory of cyclophoria is new to us and it is yet under discussion. It is not a settled matter, and it is quite likely it will prove true to a greater or less extent. I am open to conviction.

DR. EATON—Mr. Chairman, I would say that there is a little difference here. I was one of the first to recognize Dr. Stevens' views. I was operated on myself by Dr. Stevens. The conditions are quite different.

DR. PRICE—(In support of the theory advanced in his paper on cyclophoria, the Doctor then referred to his own case as an illustration.)—Twenty-five per cent. of all the cases of whatever error that fall under our observation are from insufficiency of the superior oblique, and we test every case of insufficiency of the oblique muscles as we do insufficiency of the other eye muscles, and we invariably do that before we put anything in that eye. The Doctor has referred to my not presenting cases. Gentlemen, if there is any one thing in the world that a Society or Section or body of men does object to, it is a great array of cases. I can produce from our record books hundred of cases in which we have detected cyclophoria, and in many cases where the cyclophoria has been relieved, I could relate case after case. The second case upon which we successfully used the cylinders for the purpose of correcting this condition by exercise was a lady who told us that for twelve years, she had not been able to read, write or sew. She had been in a condition of absolute idleness on account of her eyes. We did not know anything about cyclophoria then and we tried everything in the world that we could think of. She tried constitutional treatment for two or three years by physicians here, there and everywhere. She had consulted men everywhere; oculists, ophthalmologists, opticians and everybody else. When we did find out about this thing and put her upon exercise, the patient began to improve and in a short time left Nashville and went to the City of Mexico, and she says now she reads, writes and sews.

QUESTION—Is there any direct relation between astigmatism and cyclophoria?

DR. PRICE—Yes sir; from the fact of the perpetual opposition to the horizontal, the muscles have to bear the strain. If you use an ordinary ophthalmoscope you will get your axis of 90 degrees. Your weak muscle is not put upon such a strain and your strong muscle is not put upon so much tension, and you do not get the pronounced effect until the

patient recovers. I have made mention of but three cases for the simple reason that I knew it would be tiresome.

QUESTION—Why not use a prism instead of the cylinder after exercise, if there is no astigmatism in the case?

DR. PRICE.—One point about this detection of cyclophoria is—I have thought that probably I could take an ordinary prism—

DR. EATON—You don't think I question that the superior and inferior obliques rotate the eye?

DR. PRICE—Not a bit—I am satisfied that they do. The Doctor said and said decidedly yesterday in his paper that a cylinder twenty-five or fifty hundredths would produce no effect.

DR. EATON—I did not say anything of the kind. I said that a cylinder of 2 D. will produce three-fourths of a degree at the approach to the eye, but I said that I can not make the movement with a one-half D. cylinder.

DR. PRICE—My experience is this: I have cyclophoria; I have never subjected myself to systematic and constant exercise, but occasionally I take exercise for this reason, that after prolonged work I slip up with a case of neuralgia. If I exercise for five minutes with these cylinders, exercise my inferior obliques, the trouble begins to disappear and I begin to come out of the shadow of the vale and feel better. The oblique cylinder in this case is like the oblique cylinder in the case represented in his paper by the Doctor. It makes no difference whether it is one one-hundredths or 10 D. If that cylinder is incorrectly placed, it will give trouble. I have seen patients with the axis 140 in one eye and 135 in the other, and I have seen them with twenty-five one-hundredths place 15, 20, 30 or 10 degrees even from the line of horizontal, or proper correction, and that patient never gets any satisfaction until the cylinder is changed in position. Why is it that exophoria should be such an annoying factor? If one muscle is insufficient, why not another muscle insufficient? There is not a man in the room that can stand perfectly still for five minutes. Watch a body of men in a military company—every man is swaying, because there is always a slight adjustment. The same thing occurs with the eyes. The opposing muscles on some side are a little

too strong. Show me a man with his head on one side and he has hypophoria. It is a strange thing to me that the Doctor seems to think that because certain investigators have discovered that in most cases there is this variation from the normal, in all eyes that they have examined, that consequently it is normal. That is a great mistake. Gentlemen, I could relate case after case, but cases are not the thing. If you can get it into your mind that these cases do occur and are there, it is all right and you can demonstrate it. A man can oppose anything in the world, because he believes he says what is right and his experience is along that line. I trust the Doctor will yet become converted.

THE CHAIRMAN—We have one very interesting subject to come up this evening, but it is getting so late and we all want to attend the dinner, so that the first order of business to-morrow morning will be Dr. Southard's paper.

SCHOOL CHILDREN'S EYES—A PLEA FOR THE EXAMINATION OF EVERY CHILD'S EYES, WHEN COMMENCING TO ATTEND SCHOOL.

BY W. F. SOUTHARD, M.D.
SAN FRANCISCO, CAL.

Looking over the annual report of the public schools of the city of San Francisco for the year 1893, I find that there was an average daily attendance of 31,002 pupils between the ages of 5 and 17. Of this number 69 and sixty-three-hundredths per cent. were in the primary grades. This includes all children between 5 and 10 years of age. Twenty-six and six-hundredths per cent. were pupils in the grammar grades, while but 4 and thirty-one-hundredths per cent. were high school pupils. These pupils between say, the ages of 10 and 17 were divided between the grammar grade and the high school. I wish to emphasize the point that, though this does not state the total enrollment of pupils, it does very correctly give the daily attendance throughout the year. An analysis of these figures will give us some very important results. In the first place, you will observe that from the primary grades over one-half, or 50 and forty-three-hundredths per cent. fail to enter the grammar grades. These children at this time are about 10 years of age. At the close of the grammar grades, 71 and sixty-eight-hundredths per cent., or more than three-fourths, fail to enter the high school.

Finally, to show more vividly the enormous decrease of school attendance between the tenth and seventeenth years, we learn that there is a total loss of 96 per cent. as between the primary school attendance

and the high school attendance. Let us see if we can discover the cause for such a tremendous variation in attendance between the three departments of our public schools. We shall find, I think, that not one only, but many circumstances, conspire to bring about these results. The average person will be very likely to say that removals, deaths, sickness and discouragement ought to be a sufficient explanation. I am sure that a more thoughtful examination into the causes will convince us, that not only the above mentioned, but other reasons exist for such a condition of affairs. To my mind this fact is a cause for greater surprise and alarm than that but 4 per cent. of our primary pupils reach the high school, insignificant as is that number. At the age when pupils enter high school a very large number are withdrawn to become wage earners; they must assist in providing for the family. A very large percentage of the parents of these pupils think that completion of the grammar grade is all that their children need to fit them for all ordinary vocations. But this can not be the case at 10 years of age, for the percentage of permanent bread winners of 10 or 12 years of age must be very small in this State.

We find on examination, that is, by questioning teachers, superintendents and those who are daily brought into contact with children, that the number dropping out because of their inability to keep up in their studies must be very large. It is possible that as we examine this particular cause for loss more carefully, we may discover the very material we are after by which our proposition may be maintained. I have held for some time in my arguments with educators, that if curves showing the mental capacity of a thousand children of the same age, could be drawn, they would show but a very slight variation one side or the other from a given mean. I believe that we shall find that the brain capacity of our children can be measured with as good results as we have obtained in other branches of anthropometry, a study

which has been brought to a very high degree of accuracy. For example, Prof. Bowditch, of Harvard University, Prof. Gihon, of Annapolis, and Prof. Hitchcock, of Amherst, have together measured some 40,000 persons between the ages of 5 and 25; the design being to show the rate of growth of the body, for the different ages. From these measurements a certain mean standard of physical development, height, weight, chest measurement, length of body sitting and standing, etc., to which the great majority nearly attain has been found. The deviation above or below this mean is found to be about the same.

That there is a tacitly recognized uniformity in brain capacity, powers of comprehension and general intelligence among children of the same age is proved by the fact that school books have been prepared, hours of study, and the studies themselves arranged to meet this. We may question the wisdom of making text-books on such a rigid plan; we can not deny the facts. It follows therefore, very clearly, it seems to me, that very nearly equal results should be attained by the great majority of pupils. If this is not true then there can be no law governing our intellectual powers. If, then, we find in the same grades at school a very wide departure from the standard, we must conclude either that the general standard is too high or a very large percentage of our children have some disability. Why should so many children become discouraged? Their work is not particularly difficult, their hours are comparatively short, and in the primary grades they are not expected to study at home. Ill health is an important factor; thousands of children are already invalids before going to school; inherited weak constitutions; impoverishment of bodies from deficient or unwholesome food, bad hygienic surroundings at home, all unite to handicap such children in school work. The stooping forms, eyes bent close to the desk before them; the shuffling walk; the notched teeth; thin faces and other physical defects are to be seen every

day and in every primary school. If we examine this class of children we find that they have in nearly every case marked deficiency in visual acuteness. We cease to wonder that such pupils can not compete in the struggle for an education.

There is again, a large percentage who fall out of the ranks from among the apparently healthiest and brightest children. For a term or two they may have no trouble, but later on they drop behind, when they in turn become discouraged. We are able to positively state that they have no impoverished bodies, that they have always been well and have never complained before going to school. As they fall behind their classmates they are called mischievous, stupid and other epithets of like character are bestowed upon them. Many of these children come home every afternoon complaining of headache, or if they have no headache they complain of feeling tired, they get listless and hang about the house. They are being constantly corrected for not paying attention. In fact one of the most frequent complaints from teachers is, that such children never look upon the work before them more than a moment or two at a time. They are being constantly diverted to whatever is going on about them. It is needless to ask what is the outcome of this condition; the teachers get impatient and become constant fault finders, the child gets discouraged, and the parents in many cases become dissatisfied and remove their children from school. It is among just such material as this that we find the evidences which confirm us in our theory that there can be but one way to treat this whole subject. We find that the very largest proportion of these children have errors of refraction or some disturbance of the visual organ. We find also on looking into the matter more closely that the school environment is not of the best, school rooms are imperfectly lighted in most every case, the proportion between windows and floor space is less than the standard. Many rooms are so situated as regards

light that they can not by any means get good direct light. But too often the best light in the school rooms is a reflected light from some adjoining high building. Such a light is most injurious to the eyes and to the nervous system. Then there is the question of heat and ventilation, serious questions too. The proper seating of the pupils at their desks, the character of the seats themselves are in too many cases the cause of permanent injury to the growing child. Poorly printed books, and poor paper have much to do with strain upon the eyes. Though much has been attempted to remedy some of the most evident of these defects, we can not but feel that the rights of the child have not been considered when we let contracts for building school houses. Politics govern our school system, in most places, to too great an extent. We spend money enough to get the very best results; it is, however, becoming evident that enormous sums are most unwisely spent. Each of these points just mentioned needs more discussion than can be given at this time. Given these imperfect surroundings together with some defect of vision, and we have a combination which must sooner or later be detrimental to the child, physically or mentally. Is it any wonder that he has no concentration?

In pursuing this subject of our public schools a little further, we have to note that in the primary grades there was enrolled at the commencement of the year a number equal to thirty-two and thirty-five hundredths in excess of the number in regular attendance. They mostly dropped out during the first two or three weeks of school. Such a number of units thrown upon the community unable to read or write must become in time a serious burden upon it. I am most firmly convinced from personal observation that poor eyes must be a leading factor in causing this great loss. A law compelling a rigid examination of the eyes of every child when he begins to go to school would seem to be demanded. Let every child come to school bearing a certificate

stating the exact condition of its eyes. By such means the teacher will be put in possession of facts which will be of inestimable use to him and to his pupils. A plan so simple ought to commend itself to every physician, to every educator and to every parent.

Having shown the intimate relationship existing between imperfect eyes and lack of power to apprehend, a long step forward has been taken. Statistics have been made of many thousands of school children in Europe and America, by a large number of competent observers during the past twenty years. An examination of these results most clearly shows that there is a most intimate connection between education and defective vision. It has been proved that myopia (that form of defect to which all eyes tend) exists in but 1 per cent. of the primary scholars in country districts. This is due to obvious causes; country children go to school a less number of hours daily, or if they attend, less is expected of them. They also attend a less number of weeks during the year and they read or study but little at home. An examination of the city schools shows at a glance a different condition of affairs. Myopia is found in these schools in far greater proportion. As we ascend from grade to grade, from primary school to grammar school, from grammar to high school, from high school to colleges and universities, up to the highest institutions of learning, myopia is found ever on the increase, until in the very highest schools in Germany over 90 per cent. have been found myopic. In other words it is now an accepted fact that myopia is a product of civilization, one of the results of our modern methods of education. It is not our purpose to discuss these methods on this paper, simply to draw your attention to a fact now generally accepted.

Having shown that there is this relationship between myopia and education it may be said, But this does not account for the first proposition, viz.:

That such a vast percentage of pupils drop out of the ranks at the early age of 10 years. At 10 years of age myopia has been found even at its maximum to be only 10 per cent. Myopia, then, can not alone be a sufficient cause for so great a loss at so early an age. This is very true, but myopia is not the only error of refraction causing disturbances. It has been very satisfactorily shown that all infants are born hyperopic. We may also assume that a very large percentage are born astigmatic; of these probably 75 per cent. have hyperopic astigmatism. From 5 to 15 years the child's body is developing most rapidly. A greater amount of nutriment is now being taken in proportion to its weight than by adults. Tissue changes are taking place in a most rapid manner. Physiologists claim that during these years a large part of the twenty-four hours should be given to body building by means of sleep, food and exercise. The visceral organs, for example, may be altered by too great and too continuous compression. It needs no philosopher to tell us that we must expect more or less alteration in the shape of the eye-ball from too great and too continuous use of the eye at the near point. If we admit that this may take place in the so-called normal or emmetropic eye, how much the more likely are changes liable to follow over use when the eye is in its undeveloped stage? We know that the ciliary muscle of the hyperopic or undeveloped eye, from its very nature must be in a constant state of activity during all the waking hours. At the far point as well as the near point the effort is being constantly made to force the rays to a focus upon the retina. This effort means strain, and the strain means disturbance of the nervous system. The effort to maintain visual acuteness by the expenditure of force upon the ciliary muscle is not the whole story. According to the degree of hyperopia there is a change in the angle, "alpha," which means that the attempt to maintain binocular vision must be attended with expenditure of force, and this often

leads to strabismus. This proposition brings us to the point I am to make, viz.: That children's eyes are from their very construction just the sort of eyes which will cause the greatest discomfort from over exertion. The two factors, the attempt to produce visual acuteness by forcing the ciliary muscle to powerful contractions, and the effort to maintain binocular vision by forcing the extra ocular muscles, is liable to produce varied and peculiar symptoms upon the nervous system. I assert, then, that those children having hyperopia and hyperopic astigmatism are the real sufferers. Their constantly nagged nervous apparatus tends to become wearied to the extent that they can not give close attention to the work before them. They must look up often to rest their wearied muscles. Therefore, to expect continuous application and good attention is most unreasonable. That such children may lose interest in their school work on account of the difficulties surrounding them we can readily understand. We could, did space permit, show that these imperfections may have a very marked effect in the development of the child's character.

In my examination of the eyes of the students of the University of California, for the past five years, I found that the percentage of refractive errors was 68 per cent. Of this number only 6 per cent were myopic. In a detailed analysis of 1,300 errors of refraction I have shown that 75 per cent. were hyperopic in some degree. I found in looking over the list of symptoms attending these cases that pain of eyes, headache, muscular spasms and nervous symptoms generally were confined to this class of cases. The myope but rarely complains of anything more than inability to see at a distance.

It is not to be denied that myopia is greatly to be dreaded; since it can not be stayed in its progress in many cases, even though corrected with glasses. We are willing to believe that it is the end toward which a vast proportion of eyes tend when over-

worked. We claim, however, that our sympathies are rather to be directed to the youthful hyperope. Could we but examine every case during the first few years, we would not be sending to our universities young men and women with eyes just ready to break down. The remedy is examination and constant watchfulness. We must bear in mind that the tremendous waste unnecessarily taking place through the effort to work under the disadvantages of a refractive error is not easily measured. Individual suffering, and loss of power to work, may cause great material loss. From this cause the community has to be taxed to support asylums; from this cause many eyes tend toward disease and ultimate blindness. These are among the possible results of neglect on our part to do our whole duty. We may build asylums for the blind, we may do everything possible to remedy the defects already existing, yet unless we go down to the very foundation of the trouble and alter existing causes for disturbance we shall in time have as great a percentage of spectacled beings as is now seen in Germany. Remember that this is an age of conservation of energies, not waste.

DISCUSSION.

Dr. Miller, Los Angeles—This subject is of great importance. The too familiar statistics of Germany are highly instructive. While examination of the eyes of young school children is highly important we must inquire still farther as to the causes of these troubles. I am not satisfied in my own mind just what those causes are. Our people seem to be becoming more and more neurotic. Children living in cities should have more outdoor exercise. The result of our higher state of civilization is to develop a decidedly neurotic state in our entire population. I think we must look well to this and develop a state of general health if possible —greater freedom and more outdoor exercises. I think also that particularly in this State the great variety of work ordinarily given to children at schools is prejudicial. It seems to me there are educators undertaking to cover too

much ground, and there are too many studies in our schools requiring numerous and rapid transitions of the mind from one subject to another, and maintaining constantly a high degree of nerve tension. It takes some little time for the pupil to get his mind onto a given subject, and about the time he begins to get well under way he must suspend that and take up something else, and so on—we have a constant rapid change from one subject to another, which brings about the nervous tension. This I believe to be operative, as well as several other causes. Much more attention must be given to lighting, warming, and ventilating your school rooms. It might be well when the child enters school to have him present not only a certificate from his physician that he has no ocular impediment, but that he has no nervous or other impediment to his doing the work ordinarily done by children of a corresponding age.

Dr. L. R. Ryan, Galesburg, Ill.—I think the question is not so much to get at the cause of myopia because that is well known among the fraternity. The main thing is to get the people to appreciate the disease and take the means to prevent it, and we have to get the people who have an influence with the children interested, especially the teachers. I can recall a great many cases where children had been forced out of school absolutely on account of defective vision; the teachers have classed them as dullards simply because they could not read or study. And it is only a few days ago that a little girl came to me almost crying because the teacher said she was lazy, and she had a very high degree of hypermetropic astigmatism. It was absolutely impossible for the little girl to study; her sister who was a twin was very bright indeed and the two were compared and she was almost driven out of school. I think we ought to enforce upon the teachers the idea of paying attention to hygienic conditions as far as the eye is concerned—to have the light properly arranged, to have the desks arranged so that the children can study in school without getting into a cramped position; to instruct them in hygienic means and to have the idea carried to the parents at home so that everything can be arranged and they can study properly. You will find in a great many cases, espe-

cially among children of the lower classes, that the children are packed off in a dark corner and compelled to study there, while the old people are given all the advantages as far as light is concerned. I think if you will visit the great majority of our public schools and examine the hygienic arrangement as to light and desk facility you will find that they are sadly at fault. I can recall cases where the primary children have been put away down in the basement where the light was very poor indeed and where it was absolutely impossible to see an ordinary pin. Then, too, I have studied the question of the arrangement of the desks. You take the little children in the primary department and you will find that they have their chins right on the edge of the desk and the book is set at such an angle that it is absolutely impossible for them to read without getting their noses onto the books, and in writing or getting their lessons their chins will be down at this angle. (Describing the angle). Now any one who knows the question at all knows that the eyes are used under such circumstances at a very great strain, and the development of myopia is very easily produced, and I think as a Society we ought to try to get the people and especially the teachers to appreciate those hygienic conditions.

Dr. F. P. Eaton, Portland, Oregon—Mr. Chairman: What the doctor preceding me said in his closing remarks I think has hit the main point of this matter. We are quite well aware of the injury done to the school children, but the problem is how to work upon the public. Ordinarily the public understands that the myopic eye is the product of school work. It is not, however, clear at all to the public that the hypermetropic eye, and the astigmatic eye are both of them equally productive of misery and discomfort and injnstice on the part of adults to children. I hesitate myself to make a motion as fas as this Section is concerned in any way that would call attention of the educational portion of our communities to the importance of having the eyes of children examined. It has occurred to me and I suggested it to Dr. Southard that some such committee be appointed by this Association or by this Section to endeavor to have the various State Medical Societies formulate certain reso-

lutions so that the various Legislatures, or at least the municipal authorities, might act upon the school teachers in such a way for the benefit of the children as we have heard this morning.

Dr. H. M. Starkey, of Chicago—Mr. Chairman: I am very glad indeed that I am one of the few here to hear this paper of Dr. Southard's. It is a very important subject. I don't know that I can add anything to it that hasn't been entered into in the question of the general examination of the eyes of school children. I think the point of the education of teachers is a very important one. We see a great difference in teachers, and their treatment of pupils; for instance I not infrequently have children sent to me and say the teacher told them they could not come to school again until they had their eyes examined. The teacher has seen that there is something wrong with their eyes, and having said two or three times that they should go and see a doctor and they not having done it, the teacher after a time has said: "You can not come back until you have your eyes examined and see what is the trouble." It certainly is a most important point as we all know from experience. We see the pupils ordinarily—that is if we see them at all—when they have been overtaxing the eyes which are hypermetropic or having hypermetropic astigmatism, go on for years perhaps until a permanent injury has occurred. And if by precept and example or even by legislation at a later time, when we have inculcated into the public mind the necessity for such legislation, if anything can be done so that every school child in his study whether in the public school or otherwise shall have the eyes thoroughly tested it will be a great advance.

Dr. H. B. Young, Burlington, Iowa—Mr. Chairman: Following the line of thought suggested by Dr. Eaton and the last speaker, I desire to call the attention of the Section to the fact that in many of the States the school teachers are very strongly organized; in fact it is a compulsory organization known as the State Normal, and by addressing our communications to the State Teachers' Association we perhaps could get an entering wedge which would be very valuable in this connection. As far as I individually am

concerned. I have for some years past at the invitation of our local Normal Teachers' Association, had some talk on the subject; and I think every member of this Section would be very willing to volunteer such instructive talks to the Association in his own respective district. I know I have done so upon the express invitation of the Superintendent of the Normal department.

DR. SOUTHARD—I would like to hear from the President; I think he has had some experiences in that line.

THE CHAIRMAN—It only occurs to me to say that I have had some experience in the examination of school children's eyes and I think that this subject would perhaps be a very profitable one for a special discussion such as we had this year for the objective tests, and to make that suggestion to the Nominating Committee, which I think would be the proper one to bring forward the subject at the next annual meeting. It is certainly an extremely important subject, and one which can be elucidated by general discussion—at least by general discussion we can arrive, I think, at practical means of working out the result that we want to accomplish.

DR. SOUTHARD—I will not occupy much of the time of the Section. I am not egotistical enough to believe that I have written anything at all in this paper that is new to any of the gentlemen present. I did not expect to bring in any array of scientific data, but thought it would be well to have the subject started. There is no member of the Section, but who is fully aware and well posted on all statistics that have been made, and during the past twenty years the enormous amount of the statistical matter which has been made is sufficient in itself to prove the point that there is abundance of errors. I want to bring it in shape to get an expression of opinion as to some method of procedure. I myself believe that that idea of engaging the attention of the government of municipalities is a very good method; but my purpose has been to show that the great failure is in the schools in the early age, that is the primary schools. I do not expect that we can correct it after 20 years of age; we don't expect to make changes then. We then give them glasses and let them go on as best they can. It is at the

primary schools that we must commence if we are to make the change. Now the fact is as I said, I do not present any array of statistics but I simply say this: As between the primary schools in this city which have an average attendance of 31,000, and the grammar grade which is the next grade above that, and begins at 10 years of age—I say that with an average of 31,000, say up to 10 years of age, that that attendance at the next grade above, within a comparatively few weeks drops over 50 per cent. That can not be all due to the causes which I have enumerated—a desire to work, and so forth—because we don't have much of that in this State with children at that age. I have had the privilege of speaking to the State Teachers Association in this State; and several times I have talked upon the subject with different County Teachers Associations; I have had the privilege of bringing this question in a little different but analogous form to the Stanford schools, and I have endeavored to show them that the immediate cause for a great deal of our disturbance, this inability to concentrate the mind, is that children get disturbed because they can not concentrate their minds where they ought to be able to use their eyes, for instance ten or fifteen minutes at a time, and they are the ones who deserve our sympathies whatever it may lead to. I speak of myopia in my paper, but as we know it does not exist in our country to a very large extent. A myopic child can see pretty well. It is hypermetropic and astigmatic cases and, as I have stated, the results that I have obtained are entirely under the average. When I say that hypermetropic and astigmatic cases are 75 per cent. of all, I am within the bounds of my own personal examination of those cases. And I believe this, that if we were to make a change by which we could analyze a larger percentage of the pupils through the schools up to the high school though not beyond, but to the high school point, where they are then fitted to go to work, that this is a very important point. Now I acknowledge that there are a great many other causes as Dr. Miller says; for instance, the hereditary tendency to disease is very apparent, especially among certain classes. If our Section could give some inducement to this question of the necessity for a compulsory law, there is

no doubt in my mind but what the law can easily be carried out. In this State we have a compulsory law for vaccination. It is a law that does not need the approval of every member of the community, but it meets the approval of such a large number that we carry it out very effectually, and it is a law which has been passed upon by the Supreme Court as a constitutional law. Therefore it is not a law that might be put under the head of class legislation. A law which would perhaps be of greater value than even that, if we can allow such a thing, would not only meet the support of physicians and teachers and educators, but of those who are interested and who have children themselves. The methods of getting at it are to be developed later on. I am sure that it could be done, but the teachers and educators and politicians and all this class of people must have this thing brought to them by inducement of those who have had experience, such as the men in this Section have had.

In answer to a question as to what kind of certificate would be required of children, the Doctor replied as follows:

The provision should be that every child when it first comes to the primary school shall bring a certificate to the teacher; that when that child enrolls its name it shall have a certificate saying that its eyes are in a condition which will permit it to take up the ordinary course of studies that children of the same age usually do. Now it does not mean that there are to be paid oculists for every school. But it means that their eyes are normally constituted to do that, and if they are not normally constituted that they are to have glasses fitted to them to pursue the studies which children of the same age take up. You see how it is. I have found in my experience among teachers in the schools here, those so ignorant on the subject, that they have pointed out to me in the schools that such and such children were probably deficient in mental power, and I have seen those children and can call to mind several of them in fact. But there is one case that came under my observation—a child who was sent to the Home for Feeble-Minded Children. That child is wearing glasses and is now one of the brightest pupils of his age. There was nothing at all the matter with the child but inability to concentrate him-

self upon his work; he could not see; his whole horizon was bounded by just the little about him and his contact with the world was such that he knew very little of it. He was sent to the Home for Feeble-minded Children and the intelligent man at the head of it saw at once there was eye trouble, and that was corrected at once.

(Question was asked as to re-examination.)

I have no doubt but that every five years they should be re-examined. That would be included in the law. It would be easy enough to have the thing worked up in time. The object is now to get at the point that there is a necessity and that we are in favor of this law.

REPORT ON EXAMINATIONS OF THE EYES OF 1,900 SCHOOL CHILDREN OF THE PUBLIC SCHOOLS OF SAN FRANCISCO.

BY KASPAR PISCHL, M.D.
SAN FRANCISCO.

Since Professor Jaeger, of Vienna, in 1861 had begun the first scientific examination of the eyes of school children, over 200,000 pupils in all parts of the civilized world have been examined. All those investigations have proven that myopia stands in direct proportion to the education of the people. If I venture to ask your attention for a few minutes only to hear the report of the examinations made in the schools of San Francisco I do not pretend to show you anything new, but I hope it will be interesting enough to compare the conditions of the eyes of the children in this new country with those of other countries.

To enable you to judge about the value of the data of my examination, I will explain in a few words the method I employed. I examined the sight of every child, each eye separately, with Snellen's letters. When I found normal sight not impaired by putting before the eyes + 1° I marked hypermetropia. If + 1° blurred the sight, emetropia. This last column is not reliable. I am sure that many hypermetropic and astigmatic eyes were classed among emetropia. Those who with one or both eyes did not show normal sight were examined with the ophthalmoscope. Every pupil was examined regarding the conjunctiva and lids. A glance at Table 1 shows us at once an increase of myopia with the grade of the class; from 3.98 per cent. in the grammar school to 11.59 per

cent. in the normal school. At the same time, the number of pupils with normal sight decreases from 90.20 to 75.71 per cent. This deficiency of sight and increase of myopia is most prominent among the girls of the high and normal schools.

SAN FRANCISCO SCHOOLS, 1891-92. PERCENTAGE OF.

Table 1.

Schools.	No. of Scholars.	E.	An.	H.	M.	Conj.	$\frac{6}{6}$ B.E.	$\frac{6}{6}$ One E.	$\frac{6}{6}$ Both E.
Grammar.	1,200	68.60	6.32	20.9	3.98	26.25	90.20	7.03	2.77
Boys' High. . . .	305	76.06	13.12	4.59	6.23	31.11	85.91	7.86	6.23
Girls' High. . . .	299	69.68	9.28	14.02	7.02	41.00	80.66	5.00	14.34
Normal Class . .	69	63.76	18.86	5.79	11.59	41.42	75.71	1.00	23.29
Total	1,953	69.52	11.89	11.12	7.20	34.94	83.7	5.22	11.65

Table 2.

1890'24 German . .	Gymnasium . .	. . . . .		9,344	22-58%	Myopia.
1891 Gelphe	Karlsruhe. . . .	Erneiterte Elementar Schule		2,406	8.9%	"
1885 Axel Key . . .	Stockholm . . .	7 Class School .		11,210	15%	"
1879 Nicati	Marseilles . . .	Lyceum		About	30%	"
1881 Risley	Philadelphia. .	Gramm'r School 14 years.		430	11%	"
"	" . .	Normal School.		553	19%	"
1882 Dr. Derby Mittendorf	New York. . . .	Gramm'r School		1,594	10.5%	"
1892 Southard,	University of California	E.	H.	M.		
San Francisco	311 Students. . .	34.35%	35.63%	6.9%		

This fact is quite in accordance with the observations of Dr. Gould, and Dr. Southard our esteemed colleague present, who in his examinations of the eyes of the students of the University as well as his analysis of 1,300 cases of refraction found myopia or refraction errors in general more frequent in the female sex than in the male. He gives a clear explanation for it: They use their eyes more. In Europe we find the contrary to be the case. There the boy gets a much better education, boys only are admitted to the gymnasium and then to the university, and among those students we find over 50 per cent. myopia.

Of all the myopic pupils, 25.25 per cent. are of American parentage, 25.25 per cent. of mixed American and European parentage, and 49.50 per cent. are of European parentage.

With conjunctivitis I marked irritation, simple and follicular conjunctivitis. This affection increases in number with the classes.

The fact that myopia is much less prevalent here among children than in Europe or even in the East, may be explained by their better physical development, caused by abundance of good food, due to our fertile soil, and the almost constant outdoor life permitted by our wonderful climate.

In conclusion, I will repeat that these school examinations do not pretend to be of the exactness of the office examinations, but I consider them exact enough for statistical purposes. The column for myopia I believe to be reliable, the column for hypermetropia probably shows too small a percentage as some hypermetropic and astigmatic eyes are classed among emetropia having normal sight. An exact examination of refraction with mydriatic was impossible, as it would not have been permitted by the school authorities.

The great increase of the conjunctival affection with the grade of the classes points to the existence of eye-strain which in a great many cases may be caused by hypermetropic astigmatism, therefore an exact examination of every pupil would be desirable.

DISCUSSION.

Dr. S. B. Davis—In the Young Ladies' High School, I found many cases where astigmatism was reducing the vision to twenty-two-hundredths. In some cases, their vision was practically good and a slight correction made wonderful results. The difficulty was chiefly with those whose studies were pressing them, and we came to the conclusion before we examined 500 students in that way that they were getting their education at the expense of their sight.

Dr. H. H. Weer—It strikes me that physicians assume too much in regard to the eye. If there is anything that makes an eye man tired, it is to see some one attempt to do something according to some hypothetic theory and make a dismal failure of it. I can not understand how the use of

test cards is any test for hypermetropia or myopia. It strikes me that a person having astigmatism of very low degree and in ill health, would have disturbance of vision. I have been acquainted with one of the assistants of the Manhattan Eye and Ear Hospital in New York City who had 12 D. astigmatism and never wore a glass.

I would like to ask how in determining the hypermetropia and myopia, do you dispose of the accommodation? If I remember correctly, there is a vasomotor nervous system, and I have had pupils stand up in front of me whose vasomotor and spinal nervous system were so thrilled that they had lost entire control over every sphincter muscle in the body.

Now, you will all agree that one of our great troubles is our accommodation. This seems to me to be a point that should be taken into consideration in determining the hypermetropia of school children. In the dark room of the Manhattan Eye and Ear Hospital, we were requested to examine a very marked case of myopia. I examined the case with my ophthalmoscope, and I pride myself on the use of it. If I see the blood vessels and the velvety appearance I turn the glass, and if the velvety appearance comes out stronger than the white lines, then I say I have not here a case of myopia. I ran up to 8 D. and got a clear perfect vision of the disc, and the velvety condition of the retina. I remarked that it was a case of high degree of hypermetropia, and it was decided by the great Dr. Morrison that it was hypermetropia. There we had a patient who had been diagnosed by several physicians as myopia. That is merely a mistake. It illustrates the fact that if you rely on the test card to decide what the error is, and pronounce that child myopic and attempt to give it correction with the minus glass it would be entirely an error. There is another interrogation I would like to make for my own information. I notice, according to the chart, that as the school life advances, the conjunctivitis advances. Might not that be from eye-strain? Another thing—I have been so unfortunate as to just conclude fitting patients, when they had a spell of sickness. Upon recovery I found that my glass was entirely useless. This brings up another matter I wish to advance:

Is not the hypertropic eye the normal eye? Is not the emmetropic eye, the uncommon eye, called the normal eye?

Dr. H. B. Young—I look upon all these statistics with regard to school children with a little allowance. If we could be sure that those marked for myopia were myopia—but with the methods hitherto employed, I think there is room for doubt about it. There is but one way I can imagine, without an enormous amount of work that we can get at it with anything like accuracy, and that is that we must make ourselves expert skiascopists. I should not be in dependence myself upon the lenses for half the cases. I believe when we get statistics by this method of examination, we will get something very much more reliable.

Dr. W. F. Southard—The fact about statistics is this, that we have had gathered up by a very large number of gentlemen in the last twenty years an enormous amount of statistical matter, which has proved that there is a vast percentage of errors from refraction existing among school children, covering the ages between 5 and 25, besides others that have been carried on in the higher schools to which I referred this morning. The point that has been established is that nearly every child of 5 years of age is hypertropic. The second point that has been established is that myopia is but rarely seen in childhood. It has also been very accurately determined that myopia is a condition which does advance step by step in school life, as we go from grade to grade.

Now, throwing aside all the statistics relating to hypermetropia and astigmatism, one phase of myopia is not so difficult to arrive at. Myopia is very much more easily determined. In fact, it is found that using the same methods which do not show myopia at 5 years of age, it does show a percentage of myopia increasing with each grade of school life as we ascend from the primary schools into the grammar schools. If we take the European statistics, especially on myopia, because in Europe this examination has been more especially applied to myopia than to anything else—the most exhaustive paper written in the past ten years has been written and re-published in this country, and it covers the error of myopia more especially. I wish to call attention to the test which shows that more myopia

exists in the peasant schools, and shows it to increase from grade to grade in rapid ratio in Germany. That is an important factor, whatever the methods established may have been. If we analyze the greater portion of these statistics that have been made, it is very curious that they have not given their methods of procedure more accurately, so that we could know what their methods were. I should say the work had been by the use of a test card and probably glasses. We have found by a less number of examinations, covering over a considerable portion of our own country, that we do have in America a vastly less percentage of myopia for the same grades as they have abroad. Dr. Shrady, of New York, in reviewing some statistics I have made, said he believed that was the result of older civilizations—that there would be found in them a much greater percentage than in the newer countries. We have a much larger per cent. in New York and Boston than here on the Pacific coast.

Now, it being certain that myopia is the accompaniment of civilization, we as oculists should advocate laws compelling the examination of school children. I have not much faith in examinations that are not made by ophthalmoscopic examination in the dark room. I have not examined a single patient without the use of the ophthalmoscope. I do not rely upon a test card. I think that in the entire series of examinations the test has but one value, which was to determine the equivalents. That does not determine the ametropia at all. Out of a large number of students the equivalents run to 60 and 70 per cent. and 20-20. I agree with the writer who states that ametropia is simply a stage in the progress towards myopia. I want to say that I am not particular about the statistics. I think the statistical matter has been carried to the extent that we now know we have this enormous percentage of errors. The question is to know how to prevent it. I have about seven or eight hundred papers of figures in my desk that have not been tabulated, because I concluded that there is enough of that work done to show the facts, and I want to bring before the teachers and others, methods by which the troubles can be prevented in an expeditious manner. I do not think that

there is any need of our having any more than a very small percentage of error, if we do examine under the proper tests. It is proven that we have an enormous percentage of children in the primary and grammar schools who are suffering from hypermetropia uncorrected. My position in regard to children's eyes is that if we are to bring about any change in those who are older, we must begin with the school children. If we can have an examination made of the eyes of the school children, it is of just as much value as is the physical examination made in larger schools for the determining of their body power to study, as far as the functions go. Upon that point I have dwelt for some years and feel it is important for us as oculists to attempt to sustain any effort to secure legislation that will obtain compulsory examination of children at school.

H. L. Burrell—Mr. Chairman, I believe that statistics of myopia in children are absolutely unreliable, unless a course of mydriatics is given.

A Member—Mr. Chairman, we did not say in our reports myopia, hypermetropia, or astigmatism. Our reports simply say "errors of vision brought out by the tests." My reports read "such a per cent., as nine, seven, six, five or one-tenth" as the case might be.

Dr. Pischl—Mr. Chairman, I started the examination in order to compare especially the myopia which I might find here with the schools in Europe. I knew from the beginning, and I said this in my paper, that in the schools I could not possibly find out exactly the hypermetropia or the astigmatism. That can only be done in the office. It can not be done in the school room, and would not have been permitted. It would have kept the child away from the school rooms and would have been impossible. Many of my scholars were hypermetropic or astigmatic as I said in the paper. As to those which were not, that could not be decided. But I think that the numbers for myopia are reliable. I do not think it is necessary to apply the ophthalmoscope for the myopia. The trouble in the conjunctiva, or the irritation, increased with the glasses to 41 per cent., showing clearly or at least hinting that there is eye-strain in many cases, and giving us the hint that not such a great portion have normal sight. They have errors which could only be corrected in the office.

SUB-CONJUNCTIVAL INJECTIONS IN THE TREATMENT OF EYE DISEASES.

BY WM. ELLERY BRIGGS, M.D.

SACRAMENTO, CAL.

Subconjunctival Injections in Ocular Therapeutics.—During the past four years Drs. Darier and Abadie, two very progressive Paris oculists, have been extensively using subconjunctival injections of mercuric chlorid solution in the treatment of many eye diseases. As I watched their work in their large clinic, during the experimental stage of the method I saw it tried in many diseases in which there was obviously little or no hope of benefit to be derived from any treatment. But from my observations I became convinced that good results were obtained in a certain class of cases. Since that time I have treated quite a number of cases by the method and have been led to the conclusion that many of them had done better than they would under the other treatments alone.

Most of the cases under my care have been of septic or syphilitic origin, so other treatments had been used in conjunction with the subconjunctival injections.

I deem it an injustice to a private patient to neglect the use of a remedy which is known to be beneficial in order to try some uncertain treatment. It is the class of cases to which this treatment is applicable that require prompt and efficient care. It is impossible to determine with any degree of certainty the amount of influence the injections may exert on the course of a disease process. We can arrive at our conclusions only in a general way by comparing the

progress of a number of cases treated by usual methods with others similarly treated with the injections added. My conclusions may not be shared by many, but I believe that this method of treatment is a real advance and will establish a permanent place in ocular therapeutics. In Germany as well as in France a number of prominent oculists have reported very favorable results from the method, but I have been surprised that so little attention has been paid to it in this country.

Previous to the adoption of subconjunctival injections Drs. Abadie and Darier had injected sublimate solutions directly into the vitreous. They claimed that this rather bold procedure had yielded good results but it was abandoned for subconjunctival injections as being less dangerous.

Dr. Darier injects two to five drops of a 1 to 1000 sublimate solution beneath the conjunctiva and not nearer than seven millimeters to the corneal border. If the injection is made too near the cornea the pain is likely to be severe. Care should be taken not to puncture a conjunctival vessel or unpleasant ecchymosis will follow. In case this does unavoidably occur it will soon disappear under applications of hot water. The conjunctiva should be thoroughly anesthetized by cocain previous to treatment. It is hardly necessary to mention that the solutions and instruments used should be perfectly sterilized.

In my practice I have generally employed three to five drops of a 1 to 2000 bichlorid solution. The frequency of the injections should be regulated by the urgency of the case and the severity of the reaction. In a few cases they can be made daily for a few times but in most cases not oftener than two or three times a week. Immediately after the injection a little bleb appears at the point the fluid enters. Frequently sharp pains are experienced for a couple of hours after the injections. This can be mostly relieved by cocain drops and hot or cold water. The position of the injection should vary to prevent

excessive irritation—a point covered by one of the lids is most favorable.

Local treatment has been made in different parts of the body by injections in the location of the disease process with more or less success for a long time. We owe our knowledge of the method of action of subconjunctival injections to the experiments of Phlüger and some others. These experiments have demonstrated that after subconjunctival injections of bichlorid solution the salt is found in the cornea, aqueous humor, suprachoroidal space, vitreous humor, and the superficial layers of the lens. The mercuric chlorid reaches the tissues of the eye before being taken up by the general circulation. We can thus readily understand how diseases of septic or syphilitic origin are promptly benefited. These are the cases which experience shows are most improved by this method of treatment.

In years past patients suffering from local inflammations of septic origin were given mercury internally to counteract the septic process. I have no doubt that by administering bichlorid solution subconjunctivally in septic ocular disease the same end can be attained with greater certainty and rapidity than by means of general medication. In nearly all cases the subconjunctival injections should be supplemented by other treatment appropriate to the case. The constitutional treatment is of the utmost importance in most affections of the uveal tract. The injections are frequently of the greatest benefit on account of the promptness by which the mercury can be made to reach the disease process. But the constitutional treatment is of quite as much importance in order to eradicate the constitutional disease upon which the local affection depends.

In treating septic conditions of the eye, either after operation or from injury, other treatment such as cauterization of an infected wound, paracentesis of the cornea and washing out the anterior chamber,

antiseptic dressings, etc., should be combined with subconjunctival injections.

The cases in which I have found the method of treatment to do the most good are syphilitic diseases of the choroid and septic ulcers of the cornea. It seems usually to exert a salutary influence on most syphilitic processes of the uveal tract except in the acute stage of iritis. In some subacute and late stages of acute iritis I have had prompt improvement from the administration. It often seems to help in a marked manner cases of choroiditis of rheumatic origin, and in recent vitreous opacities from syphilitic retinitis good results may be expected.

When there is great danger of infection after operation Dr. Darier recommends injections previous to the operation as a prophylactic against sepsis. Such cases are those in which we are obliged to operate when disease of the lachrymal apparatus or conjunctiva exists. In septic infection after cataract extraction Dr. Darier has found the injections to act well.

Dr. Darier has laid down this rule, that in case improvement is not manifest by the tenth injection that we need not expect good from the method. This conforms to my experience as we generally get perceptible improvement in from four to ten injections.

Case 1.—R. H. S., age 28. He had suffered for three weeks from iritis of the left eye due to syphilis. Posterior synechia were so firm that a 2 per cent. solution of atropin had little effect on the pupil in twenty-four hours. The pain and inflammation being of a moderate degree subconjunctival sublimate injections of 1 to 2000 were made daily for three days when the adhesions were mostly broken up. The injections were kept up every other day for ten days longer. Mercurial inunctions were also administered. The iris was entirely freed from the lens and vision was nearly normal at the end of two weeks' treatment.

Case 2.—Mrs. L., age 48. Had been suffering with rhinitis and vitreous opacities for three weeks. Vision reduced to 1-8. Patient was placed on mercurial inunctions and subconjunctival injections were made every other day for five treatments, then twice a week for two weeks more. Vision was then two-thirds normal and retinal exudate had nearly disappeared.

Case 3.—E. N. W., age 32, single, contracted syphilis seven years previously. He had been treated constantly for two years and believed himself "cured." For ten days previous to consulting me he had noticed dimness of vision which increased rapidly. Extensive choroiditis disseminata was found. Vision in right eye 1-8, in left 1-6. Patient was given mercurial inunctions daily and subconjunctival injections every other day for two weeks; at that time vision was found to have improved in right eye to 1-2 and in left to 2-3. The choroidal inflammation had greatly improved.

Case 4.—D., age 42. Physician. Had never had syphilis. Patient had noticed his vision getting blurred for a couple of weeks. When examined inflamed patches of choroid were seen in both eyes. Patient was given pretty large doses of iodid of potash and subconjunctival injections. The injections were made twice a week for a few injections and every week or two weeks for six weeks from the beginning of treatment. The vision was then found to be perfect in both eyes The choroidal patches of inflammation had almost entirely faded.

Case 5.—G. B., age 55. Patient denied ever having had syphilis. He had noticed increasing dimness of vision for past three weeks. Extensive disseminate choroiditis was found in both eyes. Vision was equal to counting fingers at fifteen feet. Patient had been treated with blisters to temples and some eye drops. He was put on mercury and iodid of potash and subconjunctival injections in each eye every other day for five injections when vision was found to be two-thirds normal.

Case 6.—M. C. R., age 35. Patient had the right eye injured by a piece of rock in a mine. A small wound was made just below the center of the cornea but as little iritation or pain resulted from the wound the patient continued to work for two days when he consulted me. The conjunctiva was found quite swollen and red with a free muco-purulent secretion. The corneal wound was about three millimeters long and ulcerating. The anterior chamber was half full of pus. The eye was intensely painful. Cocain solution was applied and four drops of 1 to 2000 bichlorid solution was injected. Iodoform was dusted into eye and dressed with antiseptic dressing. The next morning the eye was markedly improved. The same treatment was continued for three days when the hypopion had entirely disappeared and the eye was nearly well.

DISCUSSION.

THE CHAIRMAN—The method has not commended itself very strongly to my judgment and I have been slow about adopting it, but have noted this one interesting fact that it seemed very promptly to relieve pain especially in cases of

keratitis, where pain has been very severe. I think that has been noted by every observer. It is a striking fact and one that seems rather anomalous that such effect should be produced without any apparent effect on the course of the disease.

Dr. Pischl—I wish to say that I tried it only in one case but the patient was so frightened by the swelling that I did not venture to continue it, and I am afraid that many patients will revolt against the injection.

Dr. Briggs—Mr. Chairman, I have nothing particular to add. I am sorry that there is no more discussion on the subject. I think if Dr. Pischl tried it in cases of keratitis or some such trouble, he will continue to use it. My experience has been in certain cases quite favorable, and I am thoroughly convinced in my own mind that it acted very beneficially in quite a number of cases. A number that I have tried it in found no benefit, but I have not found the severe reaction that Dr. Pischl mentioned, and I have no patients who revolted or objected seriously to the treatment.

OPTICO-CILIARY NEUROTOMY, WITH EXHIBITION OF SCISSORS.

BY WM. ELLERY BRIGGS, M.D.
SACRAMENTO, CAL.

I wish to present for the consideration of this Society a modification of my ablation scissors: Scissors for performing optico-ciliary neurotomy. The original instrument was described in the *Archives of Ophthalmology*, Vol. xvi, No. 1. It consisted of two curved scissors placed parallel so as to enable one to cut a section of the optic and ciliary nerves without cutting any of the ocular muscles. The modifications consist in the addition of a pair of claws between the two scissors to insure the removal of the cut section of the nerves.

Any one who has to perform the operation of removing a section of the nerves by first dividing the internal rectus and then uniting the muscle with sutures, as is done by some operators, has found it quite a formidable operation if it has to be done without the aid of trained assistants. These operators, I think, will find these scissors of great convenience. In a few cases where I have been able to trace the condition of the patient for a few years I have found no return of pain in the eye, and as far as I could tell, the result has been as permanent and satisfactory as it could have been had the much more formidable operation of cutting the internal rectus been performed.

I believe the operation of optico-ciliary neurotomy deserves more attention than it receives from the profession. It should be done in many poor people who are unable to purchase artificial eyes, in preference to enucleation. A deformed eye if free from

pain and danger of producing sympathetic ophthalmia is greatly preferable to an empty socket. In very young children it should usually be selected in preference to enucleation. It should be performed also in a very large class of cases which would require enucleation on account of pain or danger of sympathetic ophthalmia and in which the diseased eye looks better than an artificial eye can, or when the patient will not submit to an enucleation. In case of ocular tumors, enucleation is the only operation to be considered.

PURULENT OPHTHALMIA AND ITS TREATMENT.

BY X. C. SCOTT, M.D.
CLEVELAND, OHIO.

In speaking of purulent ophthalmology I embrace under the one name all forms of this disease as described in most text-books, under the name of purulent ophthalmia, gonorrheal ophthalmia and ophthalmia neonatorum. It has always been a mystery to me why authors persist in making this unnecessary division, unless it is to mystify the general practitioner or increase the number of pages in their books. It seems much more simple to designate all three forms of this disease under simply purulent ophthalmia or conjunctivitis blennorrhea, for the parts involved are the conjunctiva and subconjunctiva, with a serous effusion into their tissues and also into the stroma of the lids. The only difference that can be found is the presence of the gonococcus of Neisser in cases of gonorrhea, but these gonococci are not always present, and even their presence I am unwilling to admit renders the disease more dangerous if properly treated. Every one agrees that purulent conjunctivitis in any form is one of the most serious and dangerous diseases of the eye. I shared this opinion in common with others until within a few years, when I adopted a plan of treatment which has robbed this disease of all its terrors, whether it occurs in infancy, childhood or adult life, provided the cornea has not become dangerously complicated.

These cases have been cured within a week or ten days in every instance, instead of running, as the books say, a course of four or five weeks in the most

favorable cases. It is not necessary for me to describe the ordinary course of a case of purulent ophthalmia, as you are all conversant with it. You well know the great source of danger is the corneal complications which may arise from the swollen chemotic condition of the conjunctiva, cutting off the blood supply for its necessary nutrition; 2, the swollen hot lids and the cornea being continually bathed with pus causes a continual fomentation of the corneal tissue, and thus favors ulceration and destruction of this membrane; 3, the corrosive effects of the pus itself.

The great question that concerns us is how can we overcome or prevent these three important, dangerous and injurious factors which have caused such terrible havoc with so many eyes of mankind? By what treatment, or what is the best treatment, to cause these cases to run a short course and with a favorable ending without injury to the cornea?

You can not open any text-book but that you will find advocated, that in the formative stage of this disease, the conjunctival sac should be frequently cleansed of pus, at the same time using some imaginary antiseptic, but that it is extremely dangerous to apply any astringent remedies; that cold applications should be made continually to the lids until the conjunctival membrane becomes soft and succulent. This cleanliness and these cold applications are proper and certainly indicated, but in many cases if you wait until the conjunctiva becomes soft and succulent before making any applications to the surface of this membrane, changes will have taken place in the corneal tissue which can not be controlled and may finally end in the destruction of the eye affected.

Instead of a do-nothing and an expectant plan, in addition to trying to have perfect cleanliness and cold applications made continuously, I commence the use of the following prescription from the very beginning:

℞ Hydrastia sulphatis	grains 5		30
Acidi boraci	grains 5		30
Sodae biboratis	grains 5		30
Tinct. opii. deodoratæ	drachm ½	2	
Aquae distillatæ	ounce 1	32	

Mix and filter.

The attendant or nurse is instructed to cleanse the eyes every fifteen or twenty minutes day and night, by opening the lids and wiping away all the secretions possible; to make cold applications to lids by means of compresses which have laid on ice, and from four to six times a day with a long nozzled dropper and hot water to wash out all the pus held in the conjunctival sac under the lids, and afterwards to inject up and into the conjunctival sac of both the upper and lower lids an ordinary medicine dropper full of the above prescription. The nozzle of the dropper should be long and smooth and of sufficient length that it may be easily introduced without breaking under the upper lid.

The above mentioned solution seems to have a most beneficial influence on all acutely inflamed mucous membranes where there is a secretion of pus. I have used it in cases of other acutely inflamed mucous membranes with the same benign results and effects that have been experienced in the mucous membrane of the eye. When this solution is properly used in cases of purulent ophthalmia, there will be a marked improvement in the case within twenty-four hours, and within forty-eight hours there will be a remarkable diminution of the secretion of the pus, chemosis of the conjunctiva and swelling of the lids.

Once a day I turn the lids, and having cleansed away the pus apply a 1 per cent. solution of nitrate of silver to the palpebral conjunctiva by means of a large camel's-hair brush. Now you may say that this is falling back on the old treatment and that all the good comes from the employment of the silver salt. If this is true why did or do we not have the same benign results in the treatment of this

disease from nitrate of silver, as it is the treatment recommended by all authorities as soon as the conjunctiva becomes succulent?. I do not believe that the nitrate of silver has anything, to any great extent, to do with the aborting of the disease and the rapid diminution of the secretion of pus, but I use it for two reasons: 1, it is recommended by every author writing on this subject as the sovereign remedy to be relied on in the treatment of this disease and if perchance, by any mishap, an eye should be lost and a case of malpractice should result the first question to be asked would be: "How did you treat this eye?" and when it was discovered that no nitrate of silver had been used as recommended by all authorities, the hue and cry would be raised that gross malpractice had been done, and that the eye had been treated in a way not recommended by any authority, consequently there would be a possibility of being mulcted for damages by an intelligent American jury; 2, I want to see my patient every day, and if something different is not done at each visit from that which the nurse did, many families not understanding the importance and danger threatened would think that there was no necessity for the physician visiting the patient so frequently, if the nurse could make all the necessary applications of medicine. In this connection allow me to enter my most earnest protest against either strong solutions or the mitigated stick of nitrate of silver ever being used in any disease of the conjunctiva. It always does more harm than good, and in cases of purulent ophthalmia may be the cause of starting corneal complications, which it is our great object to avoid. In cases where you are not called until the disease is well formed and the conjunctiva and lids are so swollen and edematous that they can not be opened, it is imperative that the outer canthus should be divided, and I would recommend that you go even a step farther than simple division and divide the ligament (if I may call it such) which holds or binds the

upper lid to the outer margin of the orbit, so that all constriction is removed and thus free the cornea from this danger. The bulbar conjunctivæ should also be incised to favor the flow of their serum and thus lessen the chemotic condition. When the case is seen at the very start and before the lids and conjunctiva have become greatly chemosed and swollen, the above mentioned local medical treatment will cause the disease to abort in from three to five days, often within two or three days. In cases where the disease is in full blast with the conjunctiva and lids swollen, with a large secretion of pus, unless the corneal membrane has become affected all purulent discharge and swelling will disappear within a week. With this mode of treatment, as the disease abates, the conjunctiva presents an entirely different appearance from that which it presents under the ordinary manner of treatment, recommended in all our textbooks. It becomes smooth and presents a normal appearance, like to what it was before the attack. Its mucous surface presents no velvety or villous appearance with deep sulci between the swollen papilla and folds of the membrane.

My experience and results with the treatment proposed have been so satisfactory that for several years past, when I have had a patient with one eye affected with purulent ophthalmia I have not in any case taken the precaution to hermetically seal the well eye, nor have I in any case applied leeches, nor has the well eye become affected. The integument of the lids of the affected eye should be frequently dried and anointed with lanolin or something similar in order to prevent excoriations and irritation of their dermal surface.

By employing the treatment recommended in this paper you will find that, if sufficiently early employed, it will prevent chemosis of the conjunctiva and swelling of the lids if they have not already taken place. It will prevent the formation and secretion of pus, and dividing the outer commissure of

the lids or incising the chemotic conjunctiva or applying leeches. In cases where the disease has reached the acme, with greatly chemosed conjunctiva, large quantities of pus secreted and swollen lids, if the cornea is still intact, I have never seen it become affected when this treatment has been followed; but on the other hand the chemosis of the conjunctiva, swelling of the lids and secretion of the pus have rapidly disappeared, leaving no impairment of the eye. In regard to the complications that may arise from the cornea becoming affected it is only necessary to say that when this membrane does become affected the manner of management and treatment is sufficiently described in all ophthalmia text-books and it would be a waste of time to repeat them.

Since Von Graefe's time and because he recommended it, every writer writing a text-book has extolled the virtues of chlorinated water in the various forms and stages of this disease. After a faithful trial of it, in many cases, it has proved extremely unsatisfactory in my hands.

There is no doubt that many cases of purulent ophthalmia in the new-born child, can be prevented by proper washing and cleanliness of the parturient tract before birth, and proper washing of the infant's eye, before washing any other part of the body. I am prepared to go farther than this and say that with the care above mentioned of the mother and child, and a drop of this yellow solution instilled into the infant's eye three or four times daily for the first three or four days of its life, that there would be no more cases of purulent ophthalmia in new-born children, and our blind asylums would be deprived of 25 per cent. of their inmates, thus bringing untold blessings and happiness to these poor unfortunate ones who pass their lives in darkness, a burden to themselves and their friends. You may think that I am too much of an enthusiast for this treatment, and that it is impossible to obtain such wonderful results.

To those who doubt and question that such an effect and results can be obtained, I can only say try it on your cases of purulent ophthalmia, and you will become as strong a believer and enthusiastic as I am. You will feel like publishing it from the housetops as a blessing, and a prevention of misery to our fellow-men.

DISCUSSION.

DR. H. V. WÜRDEMANN, Milwaukee—The result of any method of treatment depends upon the stage of the disease in which the same is used and the condition of the tissues. I consider the cleansing method of treatment with very weak solutions of corrosive sublimate or nitrate of silver the most important. I can not conceive that in all cases it would be possible to obtain such flattering results as reported by Dr. Scott by any method of treatment. All cases may not be aborted as is evinced by the occurrence of ophthalmia in the hands of our most antiseptic accoucheurs. I call to mind several cases. I am inclined to take the middle ground, and while always endeavoring to protect myself in the family by explaining the fearful nature of the disease, I have never yet, in a comparatively large experience with this disease during the last few years, had a case go on to destruction or injury of the cornea where it has come into my hands at a sufficiently early date, before ulceration of the cornea had ensued. Despite this, I do not forget the fact that cases have occurred and have been reported by some of our foremost men in which the child has been properly attended from the inception of the malady and yet which have gone on to destruction. As has been noted, some of these patients are subjects of general cachexiæ and such, as I have had reason to note, are apt to prove intractable to any form of treatment. We should be a little careful in setting forth such rose-colored views of the question as have been advocated by the author of the paper lest material injury be done some of us by the occurrence of one of these unfortunate cases. I, for one, can not say that I have ever seen a case "aborted" where the disease had so far advanced as to be recognized by the family or attending physician and consultation called,

Those of you having had experience in urethral therapeutics will agree with me when I say that after the first manifestations of gonorrhea have appeared, the disease is seldom or never aborted, although testimony to the contrary has been brought forward. Such is, however, not the general experience. The disease may be mitigated and its course shortened by treatment. I am pleased to see Dr. Scott makes no distinctions in purulent conjunctivitis of infancy; these are almost invariably gonorrheal in origin and are to be treated upon the lines laid down for that disease. We can not do away with nitrate of silver, which used after suppuration has been well established is of marked benefit. This may only be applied by the physician or a trained nurse. I am particular about instructions to the attendant as regards thorough cleansing away of the pus. I consider that no hard instruments, such as droppers or brushes should be given into unskilled hands during the course of this disease, for the slightest abrasion of the cornea means infection of that structure and probably irreparable damage. Soft pads of absorbent cotton soaked in the solutions and the latter dropped into the eye for cleansing, and atropin when necessary in the form of an ointment are the least dangerous ways of applying the necessary medicaments. All manipulations by the attendant should be done with the utmost gentleness and thoroughness.

Dr. A. Barkan, San Francisco—I regret that Dr. Scott does not substantiate his statements with proper statistics. As he still continues the application of nitrate of silver many of us will go on and think that that remedy is the mainly curative one. We all know the excellent effects of nitrate of silver in blennorrhea neonatorum. Why should not the same remedy act beneficially in purulent ophthalmia in the adult?

Dr. Starkey—I fear that I must come under the number spoken of by Dr. Scott, just at the close of his paper, who are skeptical as to the uniformly good results obtainable by any means, but shall gladly follow his injunction and try his method and hope to be convinced. My experience has been such in these cases, both in the new-born and in adults, that I can not take a very rosy view of the prospects of recovery in

any case of purulent ophthalmia that comes under my care. It seems to me that, as was said in this Section last year, the only time in which purulent ophthalmia can be treated with universal success is before the disease occurs; when infection has actually occurred, it seems to me that a certain proportion of eyes will be lost by any treatment yet devised. Take a poorly nourished and perhaps premature infant with this disease—an infant that under any circumstances has all that he can possibly do to live, and the prognosis is exceedingly grave. We must all of us have seen such patients, with little discharge, easily controlled, also little swelling of the lids and little chemosis in which the cornea seemed to melt away from lack of nutrition. No pressure, no maceration with pus and yet no nutrition. Now it seems to me that we should be very careful about asserting that all eyes with purulent ophthalmia can be preserved by this or that treatment. Such statements reach the public and may come up to confound us after we have had one of these unfortunate results.

Dr Kaspar Pischl—May I call your attention to the publication of Prof. Burkhardt, of Berlin, who has a very extensive experience in purulent ophthalmia of young persons? He has discarded the application of ice and the use of strong solutions of nitrate of silver. He lays particular stress upon the removal of the gonococci from the conjunctival sac. For that purpose he instills into the inner corner of the eye, nitrate of silver 1 per cent. solution, and moves the lower lid rapidly up and down so that the fluid is thrown under the upper lid, and the cul-de-sac is thus thoroughly cleansed. This is repeated several times a day.

Dr. J. Dennis Arnold—The method of treating purulent ophthalmia, advanced by Dr. Scott, appears rather a step backward than a step in the advance; and yet I fancy we all feel inclined to make a trial of these medicaments, though the disease under consideration is one in which time lost in going after strange gods is likely to be fraught with dreadful consequence. The trend of modern treatment in all local disease is not the blind adoption of a fixed method with increasing faith in the power of a medicament to correct or cure the disease, but rather the rational adoption of

procedures that have for their object the removal of material which we believe to be causative factors in producing the disease. In purulent ophthalmia we dare not destroy the living bacteria present, nor dare we even use substances able to prevent their multiplication, *in situ*.

By frequent cleansing all *materies morbi* must be removed from the conjunctival sac, and by punctilious vigilance we must stand always ready to prevent impairment of function by forestallment of tissue destruction. To-day there would be little excuse for him who would allow a corneal ulcer to penetrate spontaneously the anterior chamber, or for him who failed to relieve by section the pressure that threatened to produce tissue necrosis. The Credé method with the eyes of new-born children, is not a treatment of purulent ophthalmia, but an attempt, and nearly always a successful attempt, to prevent purulent ophthalmia.

Dr. Scott, in closing—Gentlemen, I am not surprised at the remarks made about this treatment. It is simply because you have not had any experience with it. The books say it is generally four or five weeks in the most typical cases. I have not lost a single case with it, if I have the case sufficiently early. It is miraculous how quickly the discharge disappears. I do not get any of the indications of the ordinary treatment. The conjunctiva is comparatively smooth. If you will try it, every one of you, you will be just as much an advocate of it as I am. I have taken ordinary cases of pure ophthalmia in the new-born child, and in four days had them perfectly well. I do not believe the nitrate of silver has anything to do with it. I know this has been used in gonorrhea where in three or four days it stopped entirely. There is not a particle of pain in its application. In my own individual case I have used it. I had a very severe attack in my head, an immense secretion of matter from the head and nose. I tried everything to control it until I used this solution and in two doses it disappeared. It seems to be antiseptic, to destroy the formation of pus, and to act beneficially upon the mucous membrane and secretion of pus. Try it thoroughly and you will be just as much an advocate of it as I am.

CONSERVATIVE TREATMENT OF WOUNDS OF THE EYE-BALL.

BY LEWIS H. TAYLOR, M.D.
WILKES-BARRE, PA.

I do not propose to weary the members of the Section by attempting to discuss the subject of wounds of the eye-ball in all of the phases which that subject might present, nor will I even enumerate the varieties and grades of these injuries, but will confine my remarks briefly to a consideration of some of the more serious forms, such as penetrating and lacerated wounds involving the iris and lens.

Living as some of us do, either in mining or manufacturing districts, we are frequently confronted with eye injuries of all grades, from the small cinder lodged upon the cornea, which in its effects is oftentimes by no means small, to the severe laceration of cornea, lens, iris and sclera.

The important question that at once arises is, to what extent shall I interfere with this eye? and how far dare I trust to the recuperative powers of nature to bring about a good result? We are taught in some text-books that if the iris is prolapsed, at once excise it. If the wound is a penetrating one and into or near the ciliary body, enucleate the ball in order to save the other. I can not in all cases agree with these teachings. I have had a number of serious injuries to deal with, in which the iris was involved in the wound and let alone with as good results, or better, than in similar cases where an effort was made to remove the adherent portion. It is difficult to remove the portion of the iris entangled in a bruised or lacerated wound, by iridectomy, and unless seen

very early after the accident our patients will probably fare as well if the iris be left alone and allowed to heal over, fastened in the wound, as if we attempt its removal. I say, unless seen very early after the accident; I might say, if seen very early, the removal is not usually necessary, for it may oftentimes be replaced and freed from its entanglement in the wound. One of my earliest cases of this sort illustrates the latter statement:

Case 1.—Mr. H. came to my office within a few hours after receiving a severe blow upon the eye from a chip of a steel hammer. This had penetrated the cornea, wounded the iris and apparently the lens, the iris being fastened in the wound and protruding from the eye. After cleansing the eye I used a small spatula and gently replaced the iris, the pupil contracted and under a light compress bandage the eye made a most excellent recovery with normal vision.

I spoke of the lens being apparently injured, and yet there was no resulting opacity. I have repeatedly seen the same in injuries in which the capsule was undoubtedly penetrated and yet the wound healed without leaving any lens opacity. This point was ably brought out in a paper read before this Section by Dr. Milliken at the Detroit meeting in 1892, on "Injury to the Lens."

Case 2.—Martin S., age 33, came May 24, 1892, directly from the mines where he had been injured an hour or two previously. Examination of the eye showed a wound in O. S. through the sclera near the sclero-corneal junction, the iris being fastened in the wound and pupil irregularly ovoid. V. reduced to merely counting fingers. I had him go into my lavatory and thoroughly wash face and head, then after using cocain, I replaced the iris with a small spatula but it would not fully return. I dropped in eserin freely, put on a compress bandage and gave bromid and morphia to be used if necessary. On the following day he returned with pupil contracted but irregular. Iris not fully replaced but as the wound had closed I made no attempt at further replacement but used atropia instead of eserin. On May 27 he was doing very well, pupil well dilated and iris drawn away from the wound so that the pupil was slightly dilated and was irregular. V. had now risen to 20–C. From this time on the eye rapidly healed and the patient recovered useful vision with a natural pupil.

This would have been an excellent case in which to follow the teachings of the books and excise the protruding iris, and yet if it had been done, nothing would have been gained and much lost. Indeed it is a serious question whether we do not do more harm in such cases by an iridectomy than we do good. If the cause of the injury remains in the eye it must be removed, unless it has penetrated so far that its removal is impossible, in which case enucleation will sooner or later become necessary.

Dr. H. Knapp, of New York, at a meeting of the American Ophthalmological Society in 1893, in discussing his paper on "Traumatic Dislocation of the Iris," says: "Now something about prolapse of the iris in eyes that have been injured. This is an exceedingly important matter, and I have made it a rule not to touch a prolapsed iris unless I could get it entirely fresh. I have never seen sympathetic ophthalmia where there was prolapsed iris whic h had not been wounded by the injury or by the surgeon's knife. If cases come in the first four or five hours, where a clean iridectomy could be made and I am sure that the foreign body was not an infecting one, then I make an iridectomy. If they come some time afterward, I leave the prolapse alone for it is very difficult to get at the lateral portions which will be incarcerated in the corners of the wound, and if operated on they are more apt to be followed by sympathetic ophthalmia or purulent infiltration than if left alone."

Case 3.—This is an exceedingly interesting one, on account of the severity of the injury and the high grade of astigmatism developed by it. It will not be necessary to relate all the details of the case. James McC., age 31, was a blacksmith, and on May 18, 1893, went into the mines to shoe mules. He had finished his work, and was standing in the center of the hoisting carriage at the foot of the shaft ready to start up, when a piece of coal fell down the shaft from above, struck a slanting board, and glanced off and directly into his eyes causing the wound. He came to my office about three and a half hours after the injury with V. in right eye reduced to mere perception of light. The wound

was a formidable one, being through the cornea about one-eighth of an inch from its outer border, extending entirely across this portion of the cornea and into the sclera above and below, also involving iris and lens. I used cocain thoroughly, cleansed the eye with Panas solution, replaced the iris with spatula, used eserin and bandage. On the following day, the iris was again found caught in the cut and pupil ovoid, and again replaced. Same on third day when I again replaced it and began using atropia. From this time on the healing though slow was steadily progressive and he made an excellent recovery but with a slightly ovoid pupil. On July 14 the right eye showed, with the ophthalmometer, 12 D. of astigmatism, ax. 120, and the left eye none. With a correcting glass —7 cy. ax. 30 ⊂+6 cy. ax. 135 (not right angles). Vision was nearly 20–40. The patient now considered himself well and I have not seen him since.

Case 4.—Nicholas K., age 20, came Aug. 27, 1890, stating that O. D. had been cut about quarter of an hour before, by a piece of steel which had been driven forcibly against it. V. in O. D. *nil.;* in O. S. 20-70. Inspection at this time showed the right eye already congested and somewhat painful. A cut in the horizontal meridian of the eye, starting about one eighth of an inch from the corneal margin extended backwards three-quarters of an inch and penetrated through all of the tunics of the eye into the vitreous which was exuding from the cut. There was some hemorrhage into the eye, and it was impossible to tell whether the foreign body which caused the mischief was still in the eye or not, but from the patient's description of the accident, I concluded that it had fallen out at the time. The eye was very carefully washed out with Panas solution, the protruding vitreous snipped off, atropia instilled and a compress bandage applied. Morphia was prescribed to be used if needed for pain, and a very guarded prognosis given. August 28 reports that he slept well without morphia and had but little pain. The pupil is about half dilated and chemosis is already considerable. On the third day he reported that he had slept well each night and had not found it necessary to use the anodyne at all. The chemosis is now considerably less and the eye is doing well. In addition to the atropia, which was used every three hours, I cleansed the eye each day with Panas solution and he used cold applications at home.

September 2. Is improving nicely; swelling is nearly all gone and he begins to see dimly; counts fingers. September 9. The eye is doing very well; the cut through the sclera has closed entirely; the blood has largely absorbed, but nerve and vessels can not be distinctly seen with the ophthalmoscope. The anterior chamber has been clear all the time. The pupil is dilated and he counts fingers at one foot. Discontinue atropia and use Panas alone. I last saw the

patient on September 27, at which time the eye was looking well but from the excessive wound the scar contracting seemed to lessen the size of the eye in comparison with its fellow. He could now count fingers readily, the eye looked well and he had returned to work. I presume vision still further improved. I recently heard through another patient whom Mr. K. had sent to me, that he was doing well and his eye was all right.

Case 5.—Wound through sclera into vitreous. This illustrates one of the most serious types of injury and the preservation of useful vision was very gratifying to both patient and physician. Harry E., age 20. I was called to see the patient in consultation at the request of his attending physician, Dr. G. W. Guthrie, Oct. 6, 1890, about 9 o'clock in the evening. The history obtained at that time was, that he had been unpacking a barrel of bottled ale in the grocery store where he worked. The barrel was turned over on its side and the patient was leaning over it; while in this position, one of the bottles rolled out and against another causing an explosion and a shattering of the bottle struck. A piece of glass flew up and struck him above the eye, but he could not tell whether it had fallen out or not. (The piece was subsequently found stained with blood.) Inspection showed a ragged wound in the right upper eyelid about three-quarters of an inch from its margin and in a line midway of the two canthi. This cut extended through the lid, through conjunctiva and sclera, into the vitreous. The wound in the globe was about one-quarter of an inch from the bulbar-tarsal fold and extended downward nearly one-half inch and to right and left the same distance, forming a rough jagged opening exposing the vitreous beneath. Not knowing whether the glass had fallen out, and not being able to decide as to its presence with the ophthalmoscope on account of hemorrhage, I gently explored the vitreous with a sterilized strabismus hook, but could detect nothing. It now seemed advisable to close the wound, and not having at hand any very fine catgut, we used silk. A suture through the sclera tore out immediately, so two sutures taking a sufficient amount of tissue were inserted into the conjunctiva, drawing it firmly together over the exposed vitreous. Vision in O. D. *nil.* O. S. not taken. The eye was thoroughly irrigated with Panas solution, the external wound in the lid closed with catgut, dressed antiseptically, and both eyes bandaged. A very guarded prognosis was given. The patient was left in charge of Dr. Guthrie, his family physician, who removed the bandages and carefully dressed the wound daily. October 9. I saw patient to-day in Dr. Guthrie's absence. Doing well, free from pain, very little swelling, but conjunctiva intensely red, evidently subconjunctival hemorrhage. October 11. One stitch removed from the conjunc-

tiva, the other could not be found, having probably dropped out at one of the dressings. He can now count fingers dimly, eye is free from pain and is not so much injected. October 16. Ophthalmoscope shows large floating shreds; details of fundus can not be made out. Conjunctival wound has healed kindly and congestion is passing away. He has been remarkably free from pain throughout, considering the serious nature of the wound. Atropia has been instilled once daily; now discontinued. October 25. Now comes to my office; pupil is well dilated. The eye is looking very well. Nearly all of the redness is gone, some congestion remaining over the wound. He counts fingers dimly at one foot. Sees large objects dimly. Ophthalmoscope now shows the red reflex but no details of fundus. Still keeps it bandaged. V. in O. S. 20–xxx. November 17. Now goes without the bandage and is doing very well. Counts fingers directly in front of him. V. 2–C. Sclera wound entirely well. December 11. O. D. 20–C, O. S. 20–xxx. Selects O. D. + 1.75 cy. ax. 75. 20–40 and on December 18, with + .25 = + 2.25 cy. ax. 75; V. = 20–xxx; some in xx. O. S. Selected + 37 cy. ax. 90; V. = 20–xx. The eye was now thoroughly well and to all appearances the same as the left. He had excellent vision with the correcting glass, and an eye saved that according to many, ought to have been enucleated at the start.

This last case illustrates the wonderful recuperative power of the eye if it can be kept clean. This eye at first sight seemed to be in a hopeless condition and yet ended with most excellent vision.

Case 6.—Emil B., came Nov. 20, 1891. O. S. was cut in the morning about 8:30, with a piece of steel from a wedge which he had struck with a sledge-hammer. The wound extended through the cornea, iris, and edge of the lens and the iris was fastened in the corneal wound. Under cocain with a spatula, I partly replaced the iris, but as the wound had commenced healing this was somewhat difficult. I instilled a few drops of a 2 grain solution of eserin and had the patient wait an hour, at which time the iris was partly drawn away from the wound. I then instilled more eserin and gave him atropia to use at home. On the following day the pupil was three-fourths dilated but not round, rather ovoid, and I feared traumatic cataract from the wound of the lens. Continued atropia and in six days the eye was entirely clear. Another illustration of the fact that lens wounds sometimes heal without forming cataract. I saw the patient three months later when he called with a foreign body in the other eye. The left eye was entirely well. V. 20–xxx and only a slight scar remaining to mark the original injury.

I have a number of other cases, Mr. Chairman, but

it is useless to occupy the time of the Section in a rehearsal of them. I have selected a few illustrative ones. I have also many others in which the prolapsed iris has been cut away, and in some of them with excellent results but in some, I am sorry to say, with such results as to leave me in doubt as to whether I had done just the right thing in attempting to remove the prolapsed portion.

Dr. Noyes says: "The danger consequent upon prolapsus iridis increases with its extent and its nearness to the ciliary body. Traumatic prolapse is more dangerous than anterior synechiæ resulting from inflammation and perforation. A wound through the limbus and extending into the ciliary region demands abscission of all tissues which present." My own experience, however, inclines me to conservatism, and I strongly believe that a large number of these cases will do as well or better if the iris be replaced so far as it can be and let alone, as if we attempt to remove it.

DISCUSSION.

Dr. Baker—Mr. Chairman, I am firmly of the opinion that many of us have removed eyes that might have been preserved. While the danger of losing both eyes from sympathetic inflammation is very serious, I do not think that we should upon first seeing an eye and recognizing that there is a very serious injury decide on enucleation. During the past two years I have had two cases which illustrated this matter very forcibly. First, a boy about 12 years of age who had gone to one of the rod mills in the city. The iron rods as thick as your finger come out of these mills and shoot very rapidly forty or fifty feet across the room. One of these rods struck this boy in the eye, making a large opening in the lower part of the ball through the sclerotic, so large that your finger could be very easily passed through this opening. Almost one-half of the circumference of the ball seemed to be torn open; the vitreous was protruding. I immediately proposed enucleation of the eye. The parents refused. I then put in a few stitches and brought the edges of the wound together as well as possible. To my surprise it

healed, and there was not a particle of reaction. I used eserin instead of atropia. The case went on to uninterrupted recovery and the vision was almost perfect, that is, he could read something like Snellen 20.20, but the field of vision was contracted. I have watched this case since and have seen no bad results following.

A few months since a patient came to me for enucleation of the eye; he was engaged in ship building. A bolt had been knocked off and struck the lower lid, puncturing it and making a very large opening in the sclerotic, almost as large as in the boy's eye. It was one of those injuries in which it seemed as if the whole eye had escaped. The ball seemed almost collapsed. The patient was very anxious to save the eye, if possible, and following the experience I had with the boy, I adopted the same line of treatment and used eserin. This case recovered without a bad symptom. I am certain that two or three times in my life I have removed eyes with similar injuries of the sclerotic, while in these cases I have, so far, had no bad results. The same thing is true with regard to injuries of the cornea. If it does not involve the ciliary regions to any great extent, we can often save the eye when we are confident there is no foreign body in it. In most of these penetrating wounds, in these large manufacturing centers, the foreign body is a piece of steel or iron, and by the use of the magnet we can often extract the foreign body from the eye. I think we should make an effort to preserve some of these eyes that formerly we removed.

Dr. Briggs—In my earlier experience I have neglected eyes that I at present would treat, conservatively however. In case of prolapse of the iris, if I saw it when the iris could be returned I would certainly return it. I believe the danger in those cases is from infection, and the danger of infection is greater if the iris remains prolapsed than if returned. If I could not return it without too much violence to the iris, if it were not prolapsed to a considerable extent, I should use the galvano-cautery. In that way, I believe the danger of infection is lessened. In regard to the treatment of penetrating wounds, I think we are all becoming more conservative. Often we can preserve eyes from which

we can extract foreign bodies, especially a piece of steel, with perfect vision. I have several such cases with almost perfect vision from which I have extracted pieces of steel, and in some of those cases, I have either excised pieces of iris or returned the prolapsed iris.

Dr. Scott—Mr. President, the trouble I have had with prolapsed eyes has not been so much sympathetic ophthalmia, as I have had four cases of severe ophthalmia. One a case which had prolapsed iris, I desired to remove the collapsed piece and they would not consent to it. All these cases of injury about the ciliary region have been a source of great anxiety to me, and especially when the wound has healed and there is a contraction of a scar. I have seen few of these cases that have not been followed sooner or later by sympathetic trouble, and ultimately require enucleation.

Lately I had a very interesting case of injury; a man found a railroad torpedo and burst it open. It exploded and a piece of it went into his eye. I removed the prolapsed iris, and the lens seemed to be transparent. There was considerable hemorrhage and I questioned whether the piece had gone into the eye. I kept him under observation two or three weeks, and finally the eye-ball commenced to shrink. I advised him to have enucleation, and removed his eye a few days before I came away, and found that a foreign body had passed completely through the eye and lodged opposite the optic nerve, passing through the posterior part of the eye in contact with the optic nerve, so that when I came to cut through the optic nerve I found there was a foreign body to cut through. This piece was twice as large as a grain of wheat. I do not understand how that could pass through the lens and the ciliary region and the lens remain perfectly transparent, three weeks after the accident.

My experience in all injuries with the eyes is that injuries in the ciliary regions are much more serious than in any other. Also, I believe it is better where we have prolapsed iris, unless we can easily reduce it, to remove them.

Dr. H. H. Weer—Mr. Chairman: I recently had a case of a man attempting to drive a nail. The nail flew up and struck him across the ciliary region, cutting through the corner downward and outward. The aqueous humor at

once discharged. He had to take hold of the nail with his fingers and pull it out of his eye. He then hunted for the nail in the dark, found it, drove it into the board, went into the house and retired. He suffered no inconvenience. Next morning he went to the nearest physician, who put him in his carriage and brought him to me. I saw that there had been a complete opening into the anterior chamber. There was hemorrhage in the anterior chamber. Fortunately the wound closed and the aqueous humor reformed. Having been taught by Dr. Rosie, in injury across the ciliary region, denominated by him "the danger line," to call for immediate enucleation, I used 4 per cent. solution of atropia in order to save my iris. When I next saw the patient I noticed that there was discoloration of the lens. The lens was in the anterior chamber. I made preparation for enucleation, when they came again. I found that the crystalline lens had retired from the aqueous chamber and out of sight. I was also met with a flat refusal to enucleate the eye. The case in my estimation was one of ocular anesthesia. That man never had a particle of pain. There was a greenish tinge to the iris. I repeatedly asked him if he had pain, any neuralgia of the forehead, nasal, temporal or molar, and I failed to get any indication of pain. I had the patient still under observation and the question in my mind was, the crystalline lens having retired within the vitreous chamber, whether or not it would be safe for me to attempt to take out that crystalline lens, running the risk of losing the vitreous, or whether I had better enucleate or await developments. I am still awaiting some symptom of danger. I still have the chance to take the alarm at the earliest moment. If the alarming symptom comes I can then enucleate at once. I merely wish to put myself on record as being one in favor of conservative surgery in injuries to the eye-ball.

Dr. L. R. Ryan—I can recall a case that occurred a few months ago. A man was chopping a piece of wood and a splinter produced an injury to the cornea that prolapsed the iris. The prolapse was returned and by the use of eserin for several weeks the wound healed kindly and there were no symptoms of inflammation. I had two or three

other cases treated in the same way, and it seems to me that eserin has a more important place in the treatment of the eyes than we attribute to it. It prevents the tendency to glaucoma, which is apt to follow any inflammation of the iris where we use atropin alone. If we would confine ourselves to eserin in connection with atropin in iritis, or inflammation of the iris from disease, our results would be far better than they are at present. That has been my experience in the last two years.

Dr. Taylor—Mr. Chairman, I read my paper most hurriedly from the fact that there are several papers to read yet. It will not take a long time to discuss it. I do not wish to make light of the danger which every injured eye has; the danger from sympathetic ophthalmia. That is the danger, and yet if we keep that eye under observation we are ready at any time it becomes necessary to treat it. Oftentimes, our patients leave us and we fail to see them in time and it becomes too late. I recall to my mind one case of injury to the cornea, not apparently a very serious injury. The patient was doing, as I thought, well. It was a case in which there was no pain, and so the patient who thought she was doing well enough staid away. She came back in two or three weeks, and I found sympathetic ophthalmia had developed in the other eye and advised enucleation. The patient said: "No, I would rather be blind than have my eye taken out." She would not have it taken out and she is totally blind to-day in both eyes. And yet, the case was not one in the first place that any one would have thought of enucleating. It was a case of neglect, not neglect on the part of the doctor, because he had no chance to see the case, as the patient did not come back.

I merely wanted to call attention in the paper to the fact that, as was said by our chairman, I believe many eyes are enucleated which might be saved, though still keeping in mind the serious dangers in cases like those Dr. Scott has mentioned. If a foreign body remains in the eye, the eye must come out sooner or later, but if we are sure the foreign body is out, then I believe we should wait a reasonable time unless the eye is injured to such an extent that it is hopeless.

THE TREATMENT OF PTERYGIA WITH THE GALVANO-CAUTERY.

BY ARTHUR G. HOBBS, M.D.

ATLANTA, GA.

I shall not presume that it is necessary in describing this method of operating on pterygia to even enumerate the many already in vogue. I should rather ask your forbearance for merely suggesting to you that yet another method is to be added to the list already, perhaps, too long; still it may be true that each of these operations has served its purpose in turn in the process of evolution. Since it is the cardinal point in making a pterygium operation to prevent two raw surfaces from remaining in apposition after the operation, which necessarily results in the relapses which we too frequently see, why not then convert each of the raw surfaces into an eschar at once to avoid such failures, provided we are able to demonstrate practically that this means will bring about that desired result?

For some years the galvano-cautery point has been resorted to in corneal ulcers, particularly in those indolent and intractable ulcers which have refused to yield to other methods of treatment. It was suggested to me a few years ago, after seeing some of the beautiful results of the cautery when applied to ulcers of the cornea that it could, at least, produce no bad results if properly applied to the neck of a pterygium for the purpose of cutting off the nutrition of its corneal apex. I hoped that it would prove a better means of severing the arterial supply to the apex as it crossed the sclero-corneal junction. This object is generally attained by the use of the knife and

various methods have been resorted to, to accomplish the purpose. The failures in pterygium operations are usually due to the resulting reëstablishment of the arterial circulation, and when this occurs the desired end of the operation fails in proportion to the number of the reëstablished vessels. The great vascularity of a pterygium, with its vessels crossing over the sclero-corneal line to supply its apex on the cornea, renders it difficult to permanently sever all the arteries by a clean cut with the knife, hence perhaps a score of different methods of knife and scissors operations have been resorted to by different operators to accomplish this end.

Each operator aims at one end primarily, and that is to completely cut off all the blood supply from the corneal apex. Secondarily, his desire is to destroy as little conjunctiva as possible. When the first end is attained, the corneal part of the pterygium has lost its direct nutrition and can then only share with the cornea proper for its sustenance which is indirect, or by imbibition. As this meager supply proves insufficient atrophy results and the partial, or almost complete, obliteration after a time will depend upon the activity of the absorbents. For this reason the best results are obtained in younger subjects in which as a rule, the lymphatics are more active, as is also the contractibility of the arterial coats.

In many cases when the knife is resorted to a secondary pterygium results in which sufficient nutrition is reëstablished to the apex to perpetuate the corneal haziness even beyond its apparent margin to greatly interfere with vision. When the cautery section is well made I have not seen these secondary results that are often so difficult to prevent by a clean cut with the knife or scissors. In some cases, however, it may be best to combine the methods of operating as I have done in two cases not included in this report. These two pterygia were extremely vascular and muscular, hence I first used the knife in the usual way and then seared the divided edges

with the cautery blade to prevent the secondary results.

The fine-pointed cautery blade, heated with a battery that can be perfectly gauged and always relied on, is applied horizontally to the narrowest portion of the growth which is near the sclero-corneal line; the touch is made at the moment white heat is reached and should be almost instantaneous and reapplied as quickly, if the tissues are not at first completely severed. If the growth is not adherent to the sclera and corneal margin it is best to grasp it with small forceps and slightly raise it from the sclera. When the forceps are used it is easier to be certain that the cautery has made a complete section of all the hypertrophied and over vascular conjunctival tissue.

When the corneal head is large and protruding it is advisable to make a cautery application in the same manner as in applying it to a corneal ulcer. In both cases the resulting cicatrix is less—it is more transparent. This is not altogether an unknown fact but one that has seemed never to have been brought out as prominently as its importance would suggest. For this reason one may be tempted often to resort to the cautery to reduce a large pterygium apex or a corneal ulcer, for the purpose alone of attaining this corneal transparency. The resulting eschar so completely severs the vascular connection, leaving no raw surfaces in apposition that a reëstablished circulation is practically impossible; this can not be said when the knife or scissors have been used. In case the redundancy of tissue at the point of section should seem to require reduction, the scleral end of the section may be turned under and a transverse suture introduced.

I have made this operation fourteen times, and would have made it half as many more times during the last two years but for that decided objection to the cautery which we so often meet with and are bound to respect. This operation is more quickly

performed; it is followed by no bleeding; it leaves no ecchymosis; the wound heals more rapidly; there is less pain during and after its performance; it requires no bandages and the corneal haziness around the apex is less.

A weak solution of cocain, about a 2 per cent. is first dropped into the conjunctival sac, then after about five minutes a stronger solution, about 10 per cent. is applied at intervals, locally, by means of a small cotton probe for five minutes more; in the meantime the lids are held open. By this means the toxic effects are avoided except in those subjects that are unusually susceptible to cocain. In using cocain in this latter strength I try to avoid as much as possible, by the position of the patient, its contact with the cornea. It is now a well-known fact that when used in this strength, or even when much weaker, that this drug is disastrous to an abraded cornea if long continued.

The kind of galvano-cautery apparatus, the ease of its manipulation, the size of the blade, the confidence of the hand that presses the button, the requisite degree of heat which should be gauged by the turn of the screw are some of the necessary factors in this seemingly simple, yet delicate little operation, whether it be made to a corneal ulcer or to the neck of a pterygium. The only galvano-cautery apparatus in my knowledge that I would now be willing to trust for this purpose is a little transformer of an alternating current of fifty-two volts.

I am now using, in my consultation rooms the first two little instruments ever made for this purpose. I described the varied uses and advantages in a paper read before the Pan-American Congress last fall. So far as I know, the galvano-cautery has not hitherto, been used as a means of cutting off the nutrition of the corneal apex of a pterygium.

RELATIONSHIP OF OPTIC ATROPHY TO LOCOMOTOR ATAXY.

BY H. I. JONES, M D., L.R.C.P.E.

MEMBER AMERICAN MEDICAL ASSOCIATION, CALIFORNIA STATE MEDICAL SOCIETY AND SAN FRANCISCO COUNTY MEDICAL SOCIETY.

I desire to point out the special features of the relationship of the optic atrophy to ataxy, and have a case to demonstrate my topic:

J. W. H., aged 37, native of the United States. Past history: He has suffered for the last five years from rheumatic pains in various parts of his body, and from nervous twitching, lightning pain in leg, trunk and arms. No history of syphilis. He has used tobacco and stimulants freely. About a year ago he was advised to go to Paso Robles Springs and use the mud baths for his rheumatic pains; no relief was obtained; a few weeks after his return he complained of defective vision, first of the left eye, then the right. Jan. 31, 1894, when he first came under my care, I found that he was totally blind and suffering from a rapid nystagmus, and lightning pain in both legs. Ophthalmic examination showed atrophy of both optic discs; owing to the rapid movement of the nystagmus it was very difficult to make a thorough examination of the fundus. Physically he is in perfect health. He has Westphal's symptom, absence of the knee reflex, but lacks the tabes gait; he tells me that his gait has always been normal. Many patients see no relation between their pains and their amaurosis or ataxy, especially if these pains come on, as in this case, years before. He has Argyle Robertsons symptoms. Under treatment he has made slight fmprovement. Nystagmus is less, he can see shadows in my office; for instance he pointed out a picture frame in my consulting room. To test him and to show that it was not visionary, I requested him to walk up to the picture and place his hand on the left hand side of the picture, which he did. Treatment has been both local and constitutional. Locally, blisters to the cervico-dorsal region, leeches to the temple, cautery of the spine, galvanic and faradic currents. Internally, strychnia sulph. hypodermically, and by the stomach arsenite of strychnia, pilocarpin, iodid of potassium and proto-iodid of mercury.

There are few diseases which present such a multiplicity of symptoms as are found in locomotor ataxy. This patient was totally blind when he came to consult me, so I could not test his field of vision, which is a very significant symptom in cases of atrophy in tabes. There is an intimate correspondence between the development and functions of the brain and those of the optic nerve and retina; the connection is still increased by the communication which exists between the lymph spaces of the eye and those of the brain and spinal cord. These anatomic conditions not only account for the occurrence of neuro-retinitis and other ocular changes in disease and injury of the spinal cord, but a Polish physician has traced a connection between errors of refraction and curvature of the spine. The eye is not a separate autonomous organ, living as it were a life apart, nor is it a mere appendage or accessory, convenient and advantageous to the rest of the organism; on the contrary it is in closest relationship with the rest of the body, and participates in its moods. Erb tells us that a brisk cutaneous irritation causes the pupil to enlarge; pinching a comatose man will often enlarge the pupil, but the pupil in tabes is not affected by such procedure.

In all cases of atrophy of the optic nerve we should inquire for lightning pains, test the knee reflex, whether gait is normal or not. The pains are often the bridging symptoms betwixt so-called uncomplicated amaurosis and tabes. Charcot and others attribute the cause of optic atrophy to gray degeneration and to be parenchymatous. The eye-ball and its appendages draw their blood supply from two main sources, the internal and external carotid arteries. By means of the blood vessels and the fluid which circulates within them, foreign or other morbific material may be carried along the blood current into the eye.

The eye and its appendages receive the whole or part of six of the cranial nerves, as well as many fibers of the sympathetic nerves which influences the

nutrition of the eye, controlling the size of the blood vessels, and regulating the size, equality and mobility of the pupil. That a certain portion of the spinal cord exercises a direct influence on the eyes has been incontestably established by experiments of modern physiologists. Brown-Séquard demonstrated that the filaments of the sympathetic that supply the eye take their origin from that part of the spinal cord which is contiguous to the origin of the first pain of dorsal nerves, and that portion of the spinal axis which extends from the fifth cervical to the tenth dorsal vertebra possesses a distinct influence on the organs of vision, and has been termed by physiologists, "cilio-spinal" and sometimes "oculo-spinal." The conclusion that must necessarily be deduced from these observations is that the portion of the spinal cord, "oculo-spinal axis," includes within itself both vasomotor and oculo papillary filaments; which are connected with the cervical portion of the sympathetic. It is not surprising, therefore, that the eye is very susceptible to all those influences, healthy and morbid, which affect the nervous system generally, or the special innervating apparatus of the eye, either at the center, the periphery or in any part of its course. The special feature in this case is the absence of the gait.

DISCUSSION.

Dr. Young, Burlington, Iowa—Some years ago, we had an interesting paper on myopia. At that time I had an illustrative case, and can now recall five cases which might be considered under this head. I want to give the Section, briefly, some peculiarities observed in the five cases. Two were cases in which rapid optic nerve atropia came on, and they went blind in a very short time. In those cases there was absence of the reflex and some of the other symptoms of dorsalis, but we could never make out a plain case. A few other cases of unmistakable dorsalis have come under my care and observation. Typical cases have had no eye symptoms whatever. The fifth case had typical dorsalis as the result of an injury, and he had rapid, progressive optic

atrophy and became entirely blind. The question arises, Should we not make a better classification of dorsalis in connection with eye symptoms than we have at present? Are we to expect in all cases our visionary image of cases? I think not. My observation would be like this: Where we get typical dorsalis as the result of direct injury, traumatism, I should look for it. In pure asthenopic dorsalis where the symptoms come on with staggering gait, pains, etc., I have come to the conclusion that we can correct it very often.

A NEW AND CONVENIENT ARRANGEMENT OF ROTARY PRISMS.

BY EDWARD J. BROWN, A.M., M.D.
MINNEAPOLIS, MINN.

After much suffering from heterophoria and more or less satisfactory effort to relieve such trouble in myself and others, I hailed the paper of Dr. Geo. M. Gould as a ray of genuine daylight, and at once put his theories to the test. The results in my own and a good number of other cases have been highly satisfactory.

As a means of carrying out the Gould exercises, I found the prismatic arrangements at my command very cumbersome and unsatisfactory. Dr. Gould's double battery of forty prisms seemed altogether too unwieldy for convenient use. It at once occurred to me that an arrangement of rotary prisms, like Stevens phorometer, except that they should revolve in opposite directions, would answer the indications perfectly. With the assistance of Mr. Carl Thayer, a local jeweler, I have constructed an instrument which I find very useful. It consists of two 30 degree prisms mounted on two clock wheels, geared together so as to rotate in opposite directions, on a brass plate. The prisms are rotated by a handle firmly attached to one wheel, and a pointer and scale indicate at a glance the power of abduction and adduction in a given case, with a range from 0 to 60 degrees.

By a simple arrangement one prism may be disconnected from the other, and revolved alone for the purpose of measuring the strength of, or exercising the vertical muscles. A clip might be easily added to hold a third prism base up or down, but I find it

better in practice to use neither device, but to exercise the vertical muscles by slightly revolving the instrument in abduction or adduction in the horizontal plane, by means of a narrow vertical crossbar which serves as a means of suspension above and a firm handle below. The whole is suspended from a swinging arm, and by means of a simple automatic clamp easily placed at the height of the patient's eyes. It might equally well be swung from the ceiling with a weight and pulley. The instrument serves perfectly its purpose whether we choose Gould's system of over-weighting the muscles, or Savage's rhythmical exercise.

I find in practice the best plan to be a modification combining the advantages of each, *i.e.*, rotating the prisms slowly up to and beyond the patient's power to fuse, when he closes his eyes for a few seconds and the prisms are again placed at zero.

In some cases this over-weighting, even for once or twice will cause a severe headache, and there is consequently need of a wise discretion in its use. This is especially true of forced adduction, or sursumduction with the *rotary* prisms, since the unbroken and gradual increase of prismatic strength adds decidedly to the ability to overcome the prisms.

Gould advises the use of his method in accommodation. A decided advantage of the rotary prisms is that in most cases sufficient strain can be put upon the muscles at twenty feet. A further advantage is the low cost of the instrument, which ought not to exceed $10.

As regards results I will only mention two out of many cases. In one, after several months ineffectual use of rhythmical exercise, adduction was brought by Gould's method and rotary prisms from 6 degrees to 80 degrees in four weeks; and in a second, adduction of 10 degrees was brought to 70 degrees in two weeks, the patient having no other than a few moments' exercise daily at my office.

TOXIC AMBLYOPIA.

BY JAMES A. LYDSTON, M.D., PH.G.
CHICAGO, ILL.

Accustomed as we are to such precise and accurately descriptive terms in ophthalmology, it is a matter of some surprise that such vague and indefinite ones as amaurosis and amblyopia should have withstood the changes of years and still confront us as we scan the index of every well-arranged ophthalmologic text-book; but we presume that the ophthalmologist feels himself entitled to just as much license as does the author of every treatise upon the principles and practice of medicine, wherein we see an entire chapter devoted to jaundice, which is at best but a symptom of hepatic derangement. Were we to adhere strictly without qualification to the modern definition of amblyopia, we should confine ourselves strictly to those cases of visual perturbation in which there is no dioptric or structural change to account for the defective visual acuity; but in strict accordance with my subject I must depart from such a fixed classification and embrace all forms of impaired vision arising directly or indirectly from retinal or optic nerve changes due to toxic causes whether heralded by organic disturbances, ophthalmoscopically perceptible, or dependent upon retinal or optic nerve intoxication under the one significant title, toxic amblyopia. Inasmuch as in every case of optic nerve or retinal change, arising from toxic influence, it is only in the later degenerative stages that characteristic phenomena assert themselves and become sufficiently grave to be perceptible to ophthalmoscopic investigation. Thus grouping toxic amaurosis and toxic amblyopia together we find that a common cause is often the dominating etiologic factor.

Thus we have uremic amaurosis and uremic amblyopia, designed to describe different degrees of impaired vision consequent on one and the same cause. Therefore, with the remark that I shall not attempt to differentiate between toxic amblyopia and toxic amaurosis, regarding the two terms, as we must, as simply differing in degree and descriptive of visual changes resulting from either moderate or severe retinal or optic nerve intoxication or structural change, I will at once invite your attention to a few clinically demonstrable facts that may serve to shed some light upon a subject which is at best but a poorly comprehended and complex topic.

Samelsohn is entitled to credit for having presented us with the knowledge that anatomic investigation revealed in all cases of toxic amblyopia an inflammation of that part of the optic nerve lying within the optic canal, which serves to explain many otherwise inexplicable optic nerve changes. Toxic amblyopia has been known to result from many and various causes. As significant of its origin, we are burdened with numerous names descriptive of the disease. Thus we have amblyopia uremica, amblyopia albuminurica, amblyopia saturnina, amblyopia diabetica, amblyopia nicotinica, amblyopia alcoholica, etc., and of all these, probably from their greater frequency, amblyopia nicotinica and amblyopia alcoholica are the most commonly described and more fully appreciated, and we find these forms to be accompanied by a chronic retro-bulbar neuritis which lies at the bottom of the subjective manifestations—defective vision, nyctalopica, scotomata, etc., which are the suggestive manifestations to the patient, and if the interstitial neuritis is overlooked will ultimately lead to permanent optic nerve changes such as atrophy of the nerve, blanching of the papilla, atrophic excavation, contraction or narrowing of the retinal blood vessels and consequent pronounced limitation of the visual field.

Arlt described the condition that we appreciate

to-day as amblyopia nicotinica, under the title of amblyopia nyctalopica, inasmuch as nyctalopica was its most striking symptom, ascribing the nyctalopica to dazzling by intense illumination for lack of a better explanation; but thanks to Samelsohn, we are able to define a more plausible reason for the changes. Three well-marked and typical illustrations of toxic amblyopia, or better, retro-bulbar neuritis from toxic causes, arising from the excessive use of tobacco, and aggravated by alcoholic indulgence and excessive venery have presented themselves to my notice in the last few months, and in each instance I was able to define marked retinal ischemia, pronounced pupillary dilatation, together with sluggishness of the pupil under the reflex stimulus of light. In all cases the attention of the patient was directed to his eyes by great visual deterioration in both eyes, and that, too, to a similar degree in each. The constancy of nyctalopica as a symptom occurring in the early stages of this affection, I believe with Arlt is partially explicable on the ground that the pupil is dilated and therefore during the day permits light to enter the eye in floods, producing a disagreeable glare, dulling the retinal elements by over-stimulation. As we know that when the eye is suddenly exposed to the influence of the terrific glare of an arc light its retinal impressions are almost obliterated, as was typically illustrated in one of the electric light fitters in the Champlain Building, whose eyes I had the opportunity of examining ophthalmoscopically immediately after they had been subjected to the flash consequent upon a short circuit. In this case there was developed an acute traumatic conjunctivitis and amblyopia fugax, both of which symptoms disappeared with appropriate rest under atropin, dark glasses, etc. Aside from hyperemia or ischemia of the disc, we may say ophthalmoscopic examination reveals no changes in early cases of toxic amblyopia. Testing the vision, however, we note gradual diminution of the visual acuity, the cause of which

is a central scotoma. This scotoma is horizontally oval in form, extends from the macula lutea to the optic disc and corresponds to the maculo-papillary region of the retina. The gap is noted where the vision is tested by means of a white object, but red and green change in the region of the scotoma, appearing less highly colored than in other parts of the visual field, and as the case progresses, red becomes wholly imperceptible, and finally white disappears in the area corresponding to the scotoma, the vision is reduced to its extreme, and we now have an absolute scotoma, but here, as in other instances in which it is advisable to test the visual perceptivity of color, we must remember that even within physiologic limits the perception of colors is not the same in all portions of the visual field, *i.e.*, there may be a wide difference between central and peripheral color perception, and while we can test the central region with the colored skeins of Holmgren, the peripheral color acuity must be investigated by movable colored bodies which are forced into different positions, throughout the visual range, and thus are we able to define that the peripheral retinal domain is normally color blind.

The etiologic factor in that variety of toxic amblyopia styled amblyopia nicotinica is the excessive chewing or smoking of tobacco combined with excessive drinking, sexual excesses, etc., consequently most, if not all, cases are found among men, and not earlier than middle life, more frequently in cases of advanced age, as it seems that as age advances the optic nerves become less tolerant to the effects of nicotin, and again individual predisposition or particular susceptibility seems to be a prime factor in certain instances in this class of cases, therefore comparatively small quantities of nicotin are sufficient in exceptional cases to produce optic nerve intoxication to the degree of exciting amblyopia, while in others *per contra*, there seems to be almost complete immunity to this affection. A point possibly that exercises

an important bearing in the way of explaining the occurrence of toxic amblyopia is the fact that in certain cases the physiologic excavation involves almost the entire disc, and the fibers corresponding to the area of the disc implicated in the physiologic excavation are consequently more prone to degenerative change. And again, another predisposing factor is in my estimation the fact that in adult life the optic nerve fibers lying adjacent to the pial sheath regularly experience atrophy, while coincidentally therewith atrophic changes assert themselves in the optic nerve fibrillæ lying contiguous to the central vessels which, complicated by the toxic influence of any poison having a particular predilection towards optic nerve degeneration, favors optic nerve change with consequent amblyopia.

With respect to treatment, the primal indication is to eliminate the exciting or predisposing factor. We must at once withdraw tobacco and advise complete abstinence from alcoholic beverages, excessive venery, etc.; in short, everything that tends to deplete or lower the vital powers of resistance must be eschewed. Proper regimen of the eyes advised and instituted, excessive close eye work, as well as exposure to the dazzling effects of bright light should be avoided, and tonic measures of treatment at once applied. Among the remedies that stand preëminently forth in the management of toxic amblyopia from whatever cause, we yield the palm to strychnia, hypodermatically given, either at the nape of the neck, or in the temporal region. To Nagel belongs the credit of having first used strychnia in cases of optic nerve change, and Hippel has determined that it exercises a mildly stimulating effect upon even the normal nerve, increasing visual acuity in a transitory manner and widening the field of vision. In addition to strychnia hypodermatically and internally, iodid of potassium, in goodly sized doses, seems to exercise benefit by its eliminative tendencies, and at the same time probably separates nicotin into less poisonous

compounds. Another efficient remedy is pilocarpin, both internally and hypodermatically administered, exercising its effects through elimination, diuresis and diaphoresis. Numerous other therapeutic agents are said to excite a retro-bulbar neuritis with consequent amblyopia, among the most conspicuous of which are stramonium, carbon bisulphide, lead, chloral, opium, quinin, osmic acid, etc. I have met with toxic amblyopia arising from huge doses nin, but here there were, as a rule, no diagnos tic nerve changes, aside from retinal ischem hyperemia and slight swelling of the disc, ar amblyopic manifestations were fugacious in cl ter, so that the diagnosis was necessarily based the immediate restoration of vision following drawal of the medicament, which was exercis toxic effect exhibited by the amblyopic mani tions.

Suite 804, Champlain Building.

On page [illegible] [illegible]
read "[illegible]".

compounds. Another efficient remedy is pilocarpin, both internally and hypodermatically administered, exercising its effects through elimination, diuresis and diaphoresis. Numerous other therapeutic agents are said to excite a retro-bulbar neuritis with consequent amblyopia, among the most conspicuous of which are stramonium, carbon bisulphide, lead, chloral, opium, quinin, osmic acid, etc. I have met

The Journal of the American Medical Association

SHOULD RECEIVE THE SUPPORT OF ALL AMERICAN PHYSICIANS, BECAUSE

It contains all papers read at the annual meetings by representative medical men of the United States.
It contains all the medical news.
It contains the cream of current medical literature.
It is owned, printed, and managed by the ASSOCIATION.
It is a Weekly Journal, written for by medical men.
It is edited by medical men.
It is published by medical men.
It can be subscribed for at any time by any one.

THE JOURNAL OF THE AMERICAN MEDICAL ASSOCIATION
IS PUBLISHED AT 86 FIFTH AVENUE, CHICAGO, ILL., U.S.A.

Costs subscribers only $5.00 a year; single number, 10 cents.

SEND FOR SAMPLE COPY.

HC
618
COUNTWAY LIBRARY
HC 2ZGA 6

is a central scotoma. This scotoma is horizontally oval in form, extends from the macula lutea to the optic disc and corresponds to the maculo-papillary region of the retina. The gap is noted where the vision is tested by means of a white object, but red and green change in the region of the scotoma, appearing less highly colored than in other parts of the visual field, and as the case progresses, red becomes wholly imperceptible, and finally white disappears in the area corresponding to the scotoma, the vision is reduced to its extreme, and we now have an absolute scotoma, but here, as in other instances in which it is advisable to test the visual perceptivity of color, we must remember that even within physiologic limits the perception of colors is not the same in all portions of the visual field, *i.e.*, there may be a wide difference between central and peripheral color perception, and while we can test the central region with the colored skeins of Holmgren, the peripheral color acuity must be investigated by movable colored bodies which are forced into different positions, throughout the visual range, and thus are we able to define that the peripheral retinal domain is normally color blind.

The etiologic factor in that variety of toxic amblyopia styled amblyopia nicotinica is the excessive chewing or smoking of tobacco combined with excessive drinking, sexual excesses, etc., consequently most, if not all, cases are found among men, and not earlier than middle life, more frequently in cases of advanced age, as it seems that as age advances the optic nerves become less tolerant to the effects of nicotin, and again individual predisposition or particular susceptibility seems to be a prime factor in certain instances in this class of cases, therefore comparatively small quantities of nicotin are sufficient in exceptional cases to produce optic nerve intoxication to the degree of exciting amblyopia, while in others *per contra*, there seems to be almost complete immunity to this affection. A point possibly that exercises